clarion®

Owner's manual
Mode d'emploi
Manual de instrucciones

DXZ715
HX-D10

AM/FM CD PLAYER WITH CD/MD CHANGER/TV/DAB/ AC PROCESSOR CONTROL

•

COMBINÉ RADIO/CD AM/FM AVEC PILOTE DE CHANGEUR CD/MD/TV/DAB/ PROCESSEUR AC

•

SINTONIZADOR DE AM/FM Y REPRODUCTOR DE DISCOS COMPACTOS CON CONTROL DE CQMBIADOR DE DISCOS COMPACTOS/MINIDISCOS/ TELEVISOR/SINTONIZADOR DAB/PROCESADOR AC

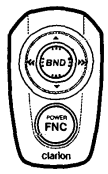

(HX D10 only)
(HX D10 uniquement)
(Solamente HX D10)

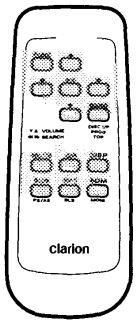

(DXZ715 only)
(DXZ715 uniquement)
(Solamente DXZ715)

ProAudio

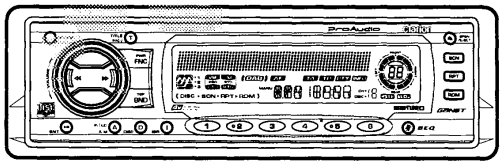

CeNET

COMPACT disc DIGITAL AUDIO TEXT

Thank you for purchasing the **Clarion DXZ715/HX-D10**

* Please read this owner's manual in its entirety before operating this equipment
* After reading this manual, be sure to keep it in a handy place (e g , glove compartment)
* Check the contents of the enclosed warranty card and keep it carefully with this manual
* This manual includes the operating procedures of the CD changer, MD changer, TV tuner and AC processor connected via the CeNET cable The CD changer, MD changer, TV tuner and AC processor have their own manuals, but no explanations for operating them are described

English

Contents

1	**FEATURES**	2
2.	**PRECAUTIONS**	3
	Handling Compact Discs	4
	Sloping Console	4
3	**CONTROLS**	5
4	**NOMENCLATURE**	6
	Names of Buttons	6
	Display Items	6
	LCD Screen	6
5	**DCP**	7
6	**REMOTE CONTROL**	8
	Inserting the Batteries	8
	Functions of Remote Control Unit Buttons	9
7	**OPERATIONS**	10
	Basic Operations	10
	Radio Operations	13
	CD Operations	14
	Other Handy Functions	16
8	**OPERATIONS OF ACCESSORIES**	18
	CD Changer Operations	18
	MD Changer Operations	20
	TV Operations	21
	AC Processor Operations	23
	Digital Radio/DAB Operations	27
	DVD Operations	31
9	**TROUBLESHOOTING**	32
10	**ERROR DISPLAYS**	33
11	**SPECIFICATIONS**	34

1. FEATURES

- Rotary Encoder Volume Control
- Motorized Sloping Console Detachable Aluminum Face
- Controller for Optional DSP/EQ, TV Tuner and DVD Deck Modules
- Built-In CD TEXT, Also Reads CD TEXT Data from Clarion Compatible CD Changer
- BEAT EQ with 3 Adjustment Modes
- CeNET with Balanced Audio Line Transmission and Dynamic Noise Canceling
- MAGI-TUNE® FM Reception System
- 24-Bit / Advanced Multi-Bit D/A Converters with 128-Times Oversampling
- 8-Times Oversampling Digital Filter and Zero-Bit Detector Mute Circuit
- 4V/4-Channel Line Level Output with Fader Control
- 4V/2-Channel Non-Fade Line Level Output with Volume Control
- 2-Channel AUX Input with 3Level Adjustments
- 200W (50W×4) Maximum Power Output (DXZ715 only)

2. PRECAUTIONS

1 When the inside of the car is very cold and the player is used soon after switching on the heater moisture may form on the disc or the optical parts of the player and proper playback may not be possible If moisture forms on the disc, wipe it off with a soft cloth If moisture forms on the optical parts of the player, do not use the player for about one hour The condensation will disappear naturally allowing normal operation

2 Driving on extremely bumpy roads which cause severe vibration may cause the sound to skip

3 When the auto antenna cord is connected to the car auto antenna cord, when the unit is switched to the radio mode (or the TV mode), the antenna is extended automatically If the car is in a narrow space, the antenna may strike something, so be careful

4 This unit uses a precision mechanism Even in the event that trouble arises, never open the case, disassemble the unit, or lubricate the rotating parts

---

This equipment has been tested and found to comply with the limits for a Class B digital device, pursuant to Part 15 of the FCC Rules

These limits are designed to provide reasonable protection against harmful interference in a residential installation

This equipment generates, uses, and can radiate radio frequency energy and, if not installed and used in accordance with the instructions, may cause harmful interference to radio communications However, there is no guarantee that interference will not occur in a particular installation

If this equipment does cause harmful interference to radio or television reception, which can be determined by turning the equipment off and on, the user is encouraged to consult the dealer or an experienced radio/TV technician for help

⚠CAUTION

USE OF CONTROLS, ADJUSTMENTS, OR PERFORMANCE OF PROCEDURES OTHER THAN THOSE SPECIFIED HEREIN, MAY RESULT IN HAZARDOUS RADIATION EXPOSURE

THE COMPACT DISC PLAYER and MINI DISC PLAYER SHOULD NOT BE ADJUSTED OR REPAIRED BY ANYONE EXCEPT PROPERLY QUALIFIED SERVICE PERSONNEL

CHANGES OR MODIFICATIONS NOT EXPRESSLY APPROVED BY THE MANUFACTURER FOR COMPLIANCE COULD VOID THE USER'S AUTHORITY TO OPERATE THE EQUIPMENT

INFORMATION FOR USERS:

CHANGES OR MODIFICATIONS TO THIS PRODUCT NOT APPROVED BY THE MANUFACTURER WILL VOID THE WARRANTY AND WILL VIOLATE FCC APPROVAL

MODEL
Clarion
12V ⊖ GROUND
AM 530-1710kHz/FM 87.9-107.9MHz
THIS DEVICE COMPLIES WITH PART 15 OF THE FCC RULES. OPERATION IS SUBJECT TO THE FOLLOWING TWO CONDITIONS: (1) THIS DEVICE MAY NOT CAUSE HARMFUL INTERFERENCE, AND (2) THIS DEVICE MUST ACCEPT ANY INTERFERENCE RECEIVED, INCLUDING INTERFERENCE TAHT MAY CAUSE UNDESIRED OPERATION
THIS PRODUCTION COMPLIES WITH DHHS RULES 21 CFR SUBCHAPTER J APPLICABLE AT DATE OF MANUFACTURE.
CLARION CO. LTD.
50 KAMITODA,TODA-SHI,SAITAMA-KEN,JAPAN
MANUFACTURED:
SERIAL No.
PE
286
Clarion Co.,Ltd.
MADE IN

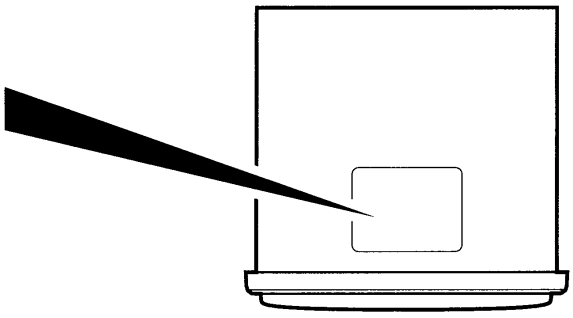

Bottom View of Source Unit

Handling Compact Discs

Use only compact discs bearing the COMPACT disc DIGITAL AUDIO mark

Do not play heart-shaped, octagonal, or other specially shaped compact discs

Handling

- New discs may have some roughness around the edges If such discs are used, the player may not work or the sound may skip Use a ball-point pen or the like to remove any roughness from the edge of the disc

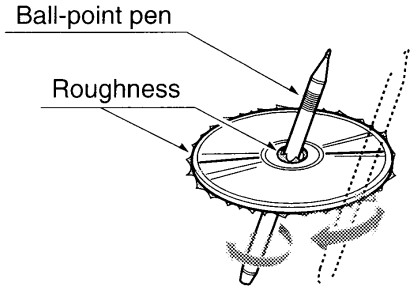

- Never stick labels on the surface of the compact disc or mark the surface with a pencil or pen
- Never play a compact disc with any cellophane tape or other glue on it or with peeling off marks If you try to play such a compact disc, you may not be able to get it back out of the CD player or it may damage the CD player
- Do not use compact discs that have large scratches, are misshapen, cracked, etc Use of such discs may cause misoperation or damage
- To remove a compact disc from its storage case, press down on the center of the case and lift the disc out, holding it carefully by the edges
- Do not use commercially available CD protection sheets or discs equipped with stabilizers, etc These may damage the disc or cause breakdown of the internal mechanism

Storage

- Do not expose compact discs to direct sunlight or any heat source
- Do not expose compact discs to excess humidity or dust
- Do not expose compact discs to direct heat from heaters

Cleaning

- To remove fingermarks and dust, use a soft cloth and wipe in a straight line from the center of the compact disc to the circumference
- Do not use any solvents, such as commercially available cleaners, anti-static spray or thinner to clean compact discs
- After using special compact disc cleaner, let the compact disc dry off well before playing it

English

Sloping Console

When you use the sloping console, be sure to close it

This unit uses sloping consoles to make large-screen displays possible

⚠CAUTION

Be careful not to get your fingers caught when opening and closing the SLOPING CONSOLE

1 For safety's sake, always close the SLOPING CONSOLE before leaving this unit unused for a prolonged period or switching OFF the ignition key

If you switch OFF the ignition key with the SLOPING CONSOLE tilted, the SLOPING CONSOLE does not close

2 Before the SLOPING CONSOLE closes, there may be a braking sound from the safety mechanism This is normal

3 If you move the SLOPING CONSOLE by hand, this may create play To correct this play, with the power on for the unit, press OPEN button [4] to close the SLOPING CONSOLE

4 After a CD is ejected, the SLOPING CONSOLE automatically returns to the tilted or closed state If there is any obstruction when the SLOPING CONSOLE tries to close, the safety mechanism is triggered and the SLOPING CONSOLE returns to the open state If this happens, remove the obstruction, then press OPEN button [4]

5 To avoid scratching the compact disk, keep the 12 or 8 cm CD level when inserting or removing them

Be sure to unfold and read the next page
Veuillez déplier et vous référer à la page suivante
Cerciórese de desplegar y de leer la página siguiente

3. CONTROLS / LES COMMANDES / CONTROLES

English

Français

Español

Source unit / Appareil pilote / Unidad fuente

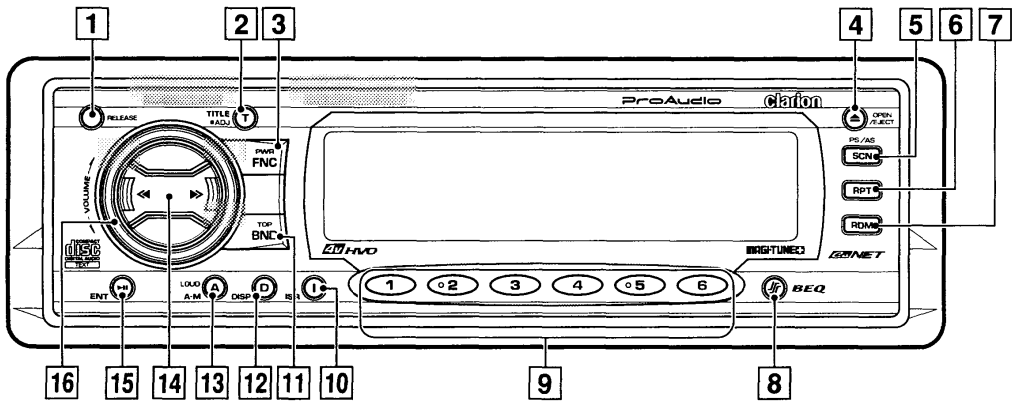

With the SLOPING CONSOLE opened / Avec la CONSOLE INCLINABLE ouverte / con la consola SLOPING CONSOLE abierta

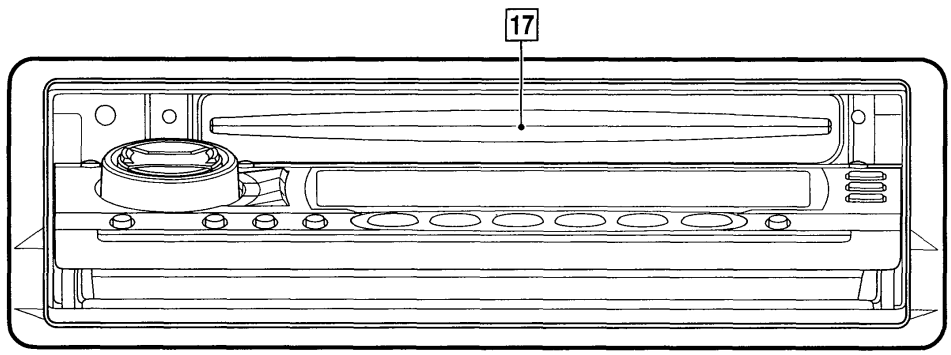

Display / Afficheur / Visualizador

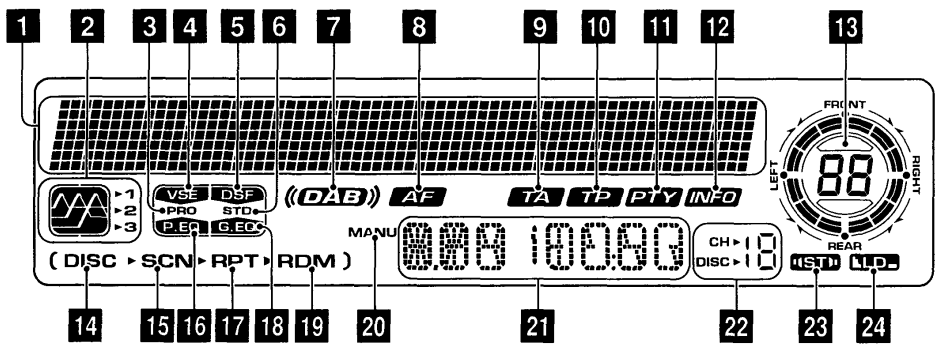

Note: *Be sure to unfold this page and refer to the front diagrams as you read each chapter*
Remarque: *Veuillez déplier cette page et vous référer aux schémas quand vous lisez chaque chapitre*
Nota: *Cuando lea los capítulos, despliegue esta página y consulte los diagramas*

4. NOMENCLATURE

Note:

*• Be sure to read this chapter referring to the front diagrams of chapter "**3 CONTROLS**" on page 5 (unfold)*

Names of Buttons

1 RELEAS button
2 TITLE button
ADJ (adjust) button
3 Power button
FNC (function) button
4 OPEN button
EJECT button
5 PS/AS (preset scan/auto store) button
SCN (scan) button
6 RPT (repeat) button
7 RDM (random) button
8 BEQ(Beat EQ) Button
9 Preset button (1 to 6)
Direct button (1 to 6) (7 to 12)
10 ISR button
11 BND (band) button
TOP button
12 DISP (display) button
13 LOUD (loudness) button
A-M (audio mode) button
14 SEARCH button
15 Play/pause button
ENT (enter) button
16 Rotary knob
17 CD insertion slot

Display Items *(Function mode)*

1 Operation status indication
*Title, clock, etc are displayed
2 BEQ indication (BEQ Beat EQ)
3 Professional mode indication
4 VSE indication (VSE Virtual Space Enhancer)
5 DSF indication (DSF Digital Sound Field)
6 STD mode indication (STD: Standard)
7 DAB indication
8 Alternative freguency indication
9 Traffic announcement indication
10 Traffic programme indication
11 Programme type indication
12 Infomation indication
13 Clock (Clock indication) etc
(A mode, FADER, BALANCE, etc indications)
14 Disc indication
15 Scan indication
16 Parametric egualizer indication
17 Repeat indication
18 Graphic egualizer indication
19 Random indication
20 Manual indication
21 Operation status indication
*The frequency, play time, etc
22 Preset channel indication (1 to 6)
Disc number indication (1 to 12)
23 Stereo indication
24 Loudness indication

LCD Screen

In extreme cold, the screen movement may slow down and the screen may darken, but this is normal The screen will recover when it returns to normal temperature

5. DCP

The control panel can be detached to prevent theft When detaching the control panel, store it in the DCP (DETACHABLE CONTROL PANEL) case to prevent scratches

We recommend taking the DCP with you when leaving the car

Removing the DCP

1 With the SLOPING CONSOLE closed, turn off the power

2 Press the RELEASE button [1] deeply to open the DCP.

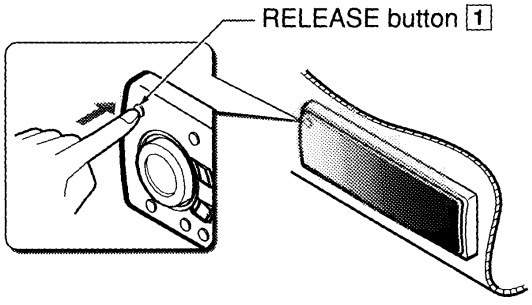

3 Pull the DCP toward you and remove it

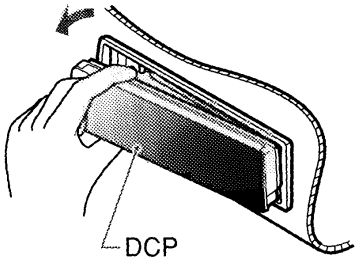

⚠CAUTION

- **Always close the SLOPING CONSOLE before removing the DCP.**
- **If you remove the DCP with the SLOPING CONSOLE open, the sloping console closes immediately Be careful not to get your fingers caught**

Attaching the DCP

1 Insert the DCP so that the Ⓐ section on the right side of the DCP catches on the hook Ⓑ on the unit

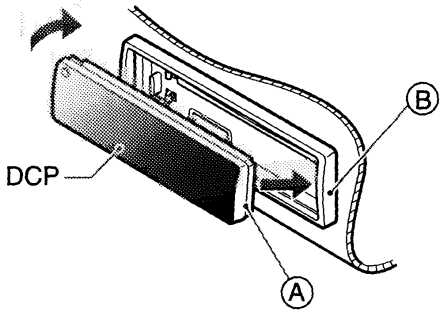

2 Press the left side of the DCP carefully to fit it in place

⚠CAUTION

- **The DCP can easily be damaged by shocks After removing it, be careful not to drop it or subject it to strong shocks**
- **If the RELEASE button [1] is pressed and the DCP is not locked into place, it may fall out from vibration of the car This can break the DCP, so after removing it, either install it on the unit or put it in its DCP case**
- **The connector connecting the unit and the DCP is an extremely important part Be careful not to damage it by pressing on it with fingernails, screwdrivers, etc**

Note:

- *If the DCP is dirty, wipe off the dirt with a soft, dry cloth only.*

ENGLISH

6. REMOTE CONTROL

* For the operating procedures of the steering remote control unit provided with the HX-D10, refer to the operating manual packed with the steering remote control unit

English

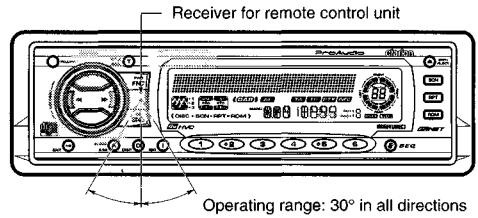

Remote control unit

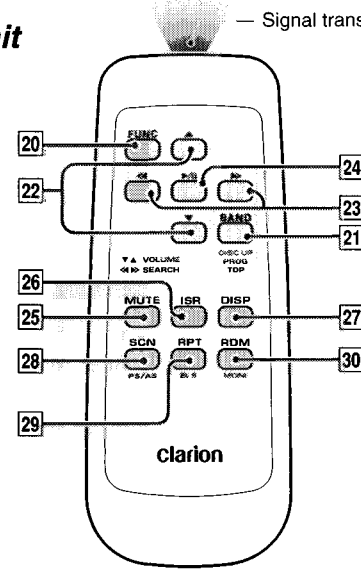

Inserting the Batteries

1 Turn the remote control unit over, then slide the rear cover in the direction of the arrow

2 Insert the AA (SUM-3, IECR-6/1 5V) batteries that came with the remote control unit facing in the directions shown in the figure, then close the rear cover

Notes:

Using batteries improperly can cause them to explode
Take note of the following points

- *When replacing batteries, replace both batteries with new ones*
- *Do not short-circuit, disassemble or heat batteries*
- *Do not dispose of batteries into fire or flames*
- *Dispose of spent batteries properly.*

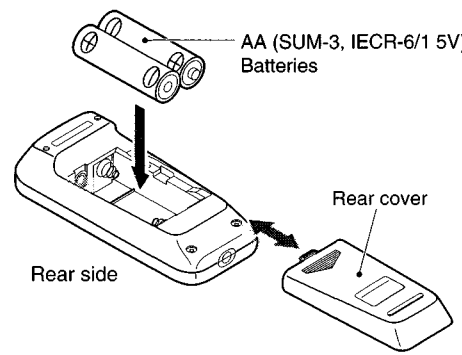

Functions of Remote Control Unit Buttons

Button \ Mode	Radio (DAB)	CD	CD changer MD changer	TV
20 FUNC	Turns power on and off When pressed and held for 1 second: Turns power off Switches among radio, DAB, CD, CD changer, MD changer, TV and AUX			
21 BAND DISC UP PROG TOP	Switches reception band	Plays the first track Top play	Moves the next disc in increasing order	Switches reception band
22 VOLUME	Increases and decreases volume (in all modes)			
23 SEARCH	Moves preset channels up and down	Moves tracks up and down When pressed and held for 1 second: Fast-forward/ fast-backward	Moves tracks up and down When pressed and held for 1 second: Fast-forward/ fast-backward	Moves preset channels up and down
24 PLAY/PAUSE	No function	Switches between playback and pause	Switches between playback and pause	No function
25 MUTE	Turns mute on and off			
26 ISR	Recalls ISR radio station in memory Press and hold for 2 seconds or longer: Stores current station into ISR memory (radio mode only) TA on and off			
27 DISP	Switches among main display, clock display			
28 SCN PS/AS	Preset scan When pressed and held for 2 seconds: Auto store	Scan play	Scan play When pressed and held for 1 second: Disc scan play	Preset scan When pressed and held for 2 seconds: Auto store
29 RPT BLS	AF function on and off	Repeat play	Repeat play When pressed and held for 1 second: Disc repeat play	No function
30 RDM MONI	PTY standby mode on and off	Random play	Random play When pressed and held for 1 second: Disc random play	Switches between TV and VTR

* Some of the corresponding buttons on the main unit and remote control unit have different functions

English

Basic Operations

Note: *Be sure to read this chapter referring to the front diagrams of chapter "**3. CONTROLS**" on page 5 (unfold).*

English

⚠CAUTION

Be sure to lower the volume before switching off the unit power or the ignition key The unit remembers its last volume setting If you switch the power off with the volume up, when you switch the power back on, the sudden loud volume may hurt your hearing and damage the unit

Turning on/off the power

Note:

- *Be careful about using this unit for a long time without running the engine If you drain the car's battery too far, you may not be able to start the engine and this can reduce the service life of the battery.*

1 Press POWER button [3]

2 The illumination and display on the unit light up The unit automatically remembers its last operation mode and will automatically switch to display that mode

3 Press and hold POWER button [3] for 1 second or longer to turn off the power for the unit

Note:

- *System check*
  *The first time this unit is turned on after the wire connections are completed, it must be checked what equipment is connected When the power is turned on, "**SYSTEM CHCK**" ↔ "**Push Power** " appears in the display, so press POWER button [3] The system check starts within the unit When the system check is complete, the power is turned off, so press POWER button [3] again*

Selecting a mode

1 Press FNC button [3] to change the mode of operation

2 Each time you press FNC button [3], the mode of operation changes in the following order

Radio mode ➜ DAB mode ➜ CD mode ➜ DVD DECK mode ➜CD changer mode ➜ MD changer mode ➜ TV mode ➜ AUX mode ➜ Radio mode

∗ External equipment not connected with CeNET is not displayed

Adjusting the volume

Turning the Rotary knob [16] clockwise increases the volume, turning it counterclockwise decreases the volume

∗ The volume level is from 0 (minimum) to 33 (maximum)

Switching the display

Press DISP button [12] to select the desired display

Each time you press DISP button [12], the display switches in the following order

Main display

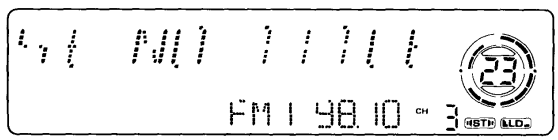

↓

Clock display

↓

Main display

∗ Once selected, the preferred display becomes the display default When a function adjustment such as volume is made, the screen will momentarily switch to that function's display, then revert back to the preferred display several seconds after the adjustment

∗ When you have entered a title in a CD/MD, it appears in the sub display If you have not entered a title, "[D] **NO-TITLE**" or "[T] **NO-TITLE**" appears in the title display instead For information on how to enter a title, refer to the subsection "**Entering titles**" in section "**Other Handy Functions**"

Setting the Beat EQ

This unit comes with 5 types of sound tone effects stored in memory Select the one you prefer

* The factory default setting is "**USER CUSTOM**"

Each time you press BEQ button [8], the tone effect changes in the following order

"1 BASS BOOST" → "2 IMPACT" → "3 EXCITE" → "USER CUSTOM" → "TONE BYPASS"

- 1 BASS BOOST : bass emphasized
- 2 IMPACT bass and treble emphasized
- 3 EXCITE bass and treble emphasiaed mid de emphasised
- USER CUSTOM user custom
- TONE BYPASS no sound effect

Adjusting the tone

Press A-M button [13] and select the item to adjust Each time you press A-M button [13], the item changes in the following order

- **When the BEQ (BASS BOOST, IMPACT, EXCITE) is set**

  "NON-FAD VOL" → "BASS BOOST" (IMPACT, EXCITE) → "BALANCE" → "FADER" → Function mode

- **When the BEQ (USER CUSTOM) is set**

  "NON-FAD VOL" → "BASS" → "MID" "TREBLE" → "BALANCE" → "FADER" → Function mode

- **When the , BEQ is off**

  "NON-FAD VOL" → "BALANCE" → "FADER" → Function mode

* Pressing the BEQ button [8] for 1 second or longer while in "**USER CUSTOM**" sets flat, and displays a "**BEQ FLAT**" message

Note:

- *When the separately-sold digital sound processor (DPH910) is used, the bass and treble tone adjustments cannot be selected To adjust the tone, refer to the section "**AC Proeesser Operations**"*

Adjusting the non fader output volume

You can adjust the volume output from the unit's non fader output terminal

1 Press A-M button [13] and select "**NON-FAD VOL**"

2 Turning the Rotary knob [16] clockwise increases the output volume, turning it counterclockwise decreases the output volume

  * The factory default setting is "**0**" (Setting range: –6 to 6)

3 When the adjustment is complete, press A-M button [13] several times until the function mode is reached

Adjusting the bass

The bass gain, bass F (center frequency) and bass Q can be adjusted as follows

1 Press the A-M button [13] and select "**BASS ◂GAIN▸**"

2 Press the SEARCH button [14] and select from **"BASS ◂GAIN▸" → "BASS ◂F 50▸" → "BASS ◂Q 1▸" → "BASS ◂GAIN▸"**

3 Turn the Rotary knob [16] clockwise or counterclockwise as needed and adjust the gain, the F (center frequency) and the Q

BASS GAIN :	–6 to 8 (The factory default setting is "**0**")
BASS F :	50Hz/80Hz/120Hz (The factory default setting is "50")
BASS Q	1/1 25/1 5/2 (The factory default setting is "**1**")

4 When the adjustment is complete, press A-M button [13] several times until the function mode is reached

Adjusting the MID

The MID gain, MID F (center frequency) and MID Q can be adjusted as follows

1 Press the A-M button [13] and select MID GAIN

2 Press the SEARCH button [14] and select from **"MID ◂GAIN▸" → "MID ◂F 1k▸" → "MID ◂Q 2▸" → "MID ◂GAIN▸"**

3 Turn the Rotary knob [16] clockwise or counterclockwise as needed and adjust the gain, the F (center frequency) and the Q

MID GAIN	–6 to 6 (The factory default setting is "**0**")
MID F	700Hz/1KHz/2KHz (The factory default setting is "**1k**")
MID Q	1 5/2 (The factory default setting is "**2**")

4 When the adfustment is complete, press A-M [13] button several times until the function mode is reached

Adjusting the TREBLE

The treble gain and treble F (center frequency) can be adjusted as follows

1 Press the A-M button [13] and select **"TREB GAIN"**

English

English

2 Press the SEARCH button [14] and select from **"TREB ◂GAIN ▸" → "TREB ◂F 12K▸" → "TREB ◂GAIN ▸"**

3 Turn the Rotary knob [16] clockwise or counterclockwise as needed and adjust the gain and the F (center frequency)

TREB GAIN	–6 to 6 (The factory default setting is "**0**")
TREB F	8KHz/12KHz (The Factory default setting is "**12K**")

4 When the adjustment is complete, press A-M button [13] several times until the function mode is reached

Adjusting the balance

1 Press A-M button [13] and select "**BALANCE**"

2 Turning the Rotary knob [16] clockwise emphasizes the sound from the right speaker; turning it counterclockwise emphasizes the sound from the left speaker

* The factory default setting is "**0**" (Adjustment range: L13 to R13)

3 When the adjustment is complete, press A-M button [13] several times until the function mode is reached

Adjusting the fader

1 Press A-M button [13] and select "**FADER**"

2 Turning the Rotary knob [16] clockwise emphasizes the sound from the front speakers, turning it counterclockwise emphasizes the sound from the rear speakers

* The factory default setting is "**0**" (Adjustment range: F12 to R12)

3 When the adjustment is complete, press A-M button [13] several times until the function mode is reached

Adjusting the Beat EQ

1 Press BEQ button [8] and select the Beat EQ mode (1 to 3) to adjust

2 Press A-M button [13] and select "**BASS BOOST or IMPACT or EXCITE**"

3 Turning the Rotary knob [16] clockwise adjusts in the + direction, turning it counterclockwise adjusts in the – direction

* When BASS BOOST is selected, you can adjust the bass in the range of –3 to 3
* When IMPACT and EXCITE is selected, you can adjust the bass and treble in the range of –3 to 3

4 When the adjustment is complete, press A-M button [13] several times until the function mode is reached

Turning on/off the loudness

The loudness effect emphasizes the bass and treble to create a natural sound tone When you are listening to music at a low volume, it is recommended to use the loudness effect

1 Press and hold LOUD button [13] for 1 second or longer to turn on the loudness effect When the loudness effect is turned on, "**LD**" lights in the display

2 Press and hold LOUD button [13] for 1 second or longer to turn off the loudness effect "**LD**" goes off in the display

Note:

- *When using a sold separately digital sound processor (DPH910), a feature called auto loudness is selected This function is different from the loudness effect For further details on the auto loudness feature, refer to the subsection "**Output adjustment of auto loudness, subwoofer and playback band**" in section "**AC Processer Operations**"*

Radio Operations

FM Reception

For enhanced FM performance the MAGI-TUNEC® tuner includes signal actuated stereo control, Enhanced Multi AGC, Impulse noise reduction curcuits and Multipath noise reduction circuits

Changing the reception area

This unit is initially set to USA frequency intervals of 10 kHz for AM and 200 kHz for FM When using it outside the USA, the frequency reception range can be switched to the intervals below

● **Setting the reception area**

1 Press BND button [11] and select the desired radio band (FM or AM)

2 While pressing DISP button [12], each time you press and hold the number "**6**" of the Preset buttons [9] for 2 seconds or longer, the reception area switches from inside the USA to outside the USA or from outside the USA to inside the USA

∗ Any station preset memories are lost when the reception area is changed

Listening to the radio

1 Press FUNCTION button [3] and select the radio mode The frequency is displayed

2 Press BAND button [11] and select the radio band Each time the button is pressed, the radio reception band changes in the following order

FM1 ➜ FM2 ➜ FM3 ➜ AM ➜ FM1

3 Press the right or left side of SEARCH button [14] to tune in the desired station

Tuning

There are 3 types of tuning mode available, seek tuning, manual tuning and preset tuning

Seek tuning

1 Press BAND button [11] and select the desired band (FM or AM)

∗ If "**MANU**" is lit in the display, press and hold BAND button [11] for 1 second or longer "**MANU**" in the display goes off and seek tuning is now available

2 Press the right or left side of SEARCH button [14] to automatically seek a station
When the right side of SEARCH button [14] is pressed, the station is sought in the direction of higher frequencies; if the left side of SEARCH button [14] is pressed, the station is sought in the direction of lower frequencies

Manual tuning

There are 2 ways available Quick tuning and step tuning
When you are in the step tuning mode, the frequency changes one step at a time In quick tuning mode, you can quickly tune the desired frequency

1 Press BND button [11] and select the desired band (FM or AM)

∗ If "**MANU**" is not lit in the display, press and hold BND button [11] for 1 second or longer "**MANU**" is lit in the display and manual tuning is now available

2 Tune into a station

● **Quick tuning:**

Press and hold the right or left side of SEARCH button [14] for 1 second or longer to tune in a station

● **Step tuning:**

Press the right or left side of SEARCH button [14] to manually tune in a station

Recalling a preset station

A total of 24 preset positions (6-FM1, 6-FM2, 6-FM3, 6-AM) exists to store individual radio stations in memory Pressing the corresponding preset button recalls the stored radio frequency automatically

1 Press BND button [11] and select the desired band (FM or AM)

2 Press the corresponding Preset button [9] to recall the stored station

∗ Press and hold one of Preset buttons [9] for 2 seconds or longer to store that station into preset memory

Manual memory

1 Select the desired station with seek tuning, manual tuning or preset tuning

2 Press and hold one of Preset buttons [9] for 2 seconds or longer to store the current station into preset memory

Auto store

Auto store is a function for storing up to 6 stations that are automatically tuned in sequentially
If 6 receivable stations cannot be received, a previously stored station remains unoverwritten at the memory position

1 Press BND button [11] and select the desired band (FM or AM)

English

2 Press and hold AS button [5] for 2 seconds or longer The stations with good reception are stored automatically to the preset channels

* If auto store is performed in the FM bands, the stations are stored in FM3 even if FM1 or FM2 was chosen for storing stations

English

Preset scan

Preset scan receives the stations stored in preset memory in order This function is useful when searching for a desired station in memory

1 Press PS button [5]

2 When a desired station is tuned in, press PS button [5] again to continue receiving that station

Note:

- *Be careful not to press and hold PS button [5] for 2 seconds or longer, otherwise the auto store function is engaged and the unit starts storing stations*

CD Operations

Loading a CD

1 Press OPEN button [4] The SLOPING CONSOLE opens.

⚠ CAUTION

Be careful not to get your fingers caught when opening and closing the SLOPING CONSOLE

2 Insert a CD into the centre of the insertion slot with the label side facing up The CD plays automatically after loading

Notes:

- *Never insert foreign objects into the CD insertion slot*
- *If the CD is not inserted easily, there may be another CD in the mechanism or the unit may require service*
- *Discs not bearing the* COMPACT disc DIGITAL AUDIO *mark and CD-ROMs cannot be played by this unit*

Loading 8 cm compact discs

* No adapter is required to play an 8 cm CD
* Insert the 8 cm CD into the centre of the insertion slot

3 After loading a CD, the SLOPING CONSOLE closes automatically

Notes:

- *Note that SLOPING CONSOLE close immediately after a CD is inserted into CD insertion slot*
- *If no CD is loaded in the SLOPING CONSOLE, it closes after 30 seconds*

Listening to a CD already inserted

Press FNC button [3] to select the CD mode Play starts automatically If no CD is loaded in the unit, "**NO DISC**" appears in the display

Pausing play

1 Press Play/pause button [15] to pause play "**PAUSE**" appears in the display

2 To resume CD play, press Play/pause button [15] again

Ejecting a CD

1 Press the EJECT button [4] The SLOPING CONSOLE opens and a CD ejects "**EJECT**" appears in the display

⚠CAUTION

Be careful not to get your fingers caught when opening and closing the SLOPING CONSOLE

2 Remove the CD and press OPEN button [4] to close the SLOPING CONSOLE

Notes:

- *Be sure to close the SLOPING CONSOLE after removing the CD*
- *The SLOPING CONSOLE closes automatically 30 seconds after removing the CD*

* If a CD (12 cm) is left in the ejected position for 15 seconds, the CD is automatically reloaded (Auto reload)
* 8 cm CDs are not auto reloaded Be sure to remove it when ejected

Note:

- ***If you force a CD into before auto reloading, this can damage the CD***

Selecting a track

● **Track-up**

1 Press the right side of SEARCH button [14] to move ahead to the beginning of the next track

2 Each time you press the right side of SEARCH button [14], the track advances ahead to the beginning of the next track

● **Track-down**

1 Press the left side of SEARCH button [14] to move back to the beginning of the current track

2 Press the left side of SEARCH button [14] twice to move to the beginning of the previous track

Fast-forward/fast-backward

● **Fast-forward**

Press and hold the right side of SEARCH button [14] for 1 second or longer

● **Fast-backward**

Press and hold the left side of SEARCH button [14] for 1 second or longer

Top function

The top function resets the CD player to the first track of the disc Press TOP button [11] to play the first track (track No 1) on the disc

Scan play

The scan play locates and plays the first 10 seconds of each track on a disc automatically This function continues on the disc until it is cancelled

* The scan play is useful when you want to select a desired track

1 Press the SCN button [5] to start scan play "**SCN**" lights in the display

2 To cancel the scan play, press the SCN button [5] again "**SCN**" goes off from the display and the current track continues to play

Repeat play

The repeat play continuously plays the current track This function continues automatically until it is cancelled

1 Press the RPT button [6] "**RPT**" lights in the display and the current track is repeated

2 To cancel the repeat play, press the RPT button [6] again "**RPT**" goes off from the display and normal play resumes

Random play

The random play selects and plays individual tracks on a disc in no particular order This function continues automatically until it is cancelled

1 Press the RDM button [7] "**RDM**" lights in the display, an individual track is selected randomly and play begins

2 To cancel the random play, press the RDM button [7] again "**RDM**" goes off and normal play resumes

English

English

Entering titles

Titles up to 10 characters long can be stored in memory and displayed for TV stations The numbers of titles that can be entered for each mode are as follows

Mode	Number of titles
TV mode	15 titles

CD changer mode	Number of titles
CDC655z connected	60 titles
CDC655Tz connected	100 titles
CDC1255z connected	50 titles

1 Press FNC button [3] to select the mode you want to enter a title (CD changer or TV)
2 Select and play a CD in the CD changer or tune in to a TV station for which you want to enter the title
3 Press DISP button [12] and display the main
4 Press TITLE button [2] "**TTL**" appears in the display and the cursor position flashes
5 Press the right or left side of SEARCH button [14] to move the cursor
6 Press DISP button [12] to select a character Each time you press DISP button [12], the character changes in the following order

Capital letters ➜ Small letters ➜ Numbers and Symbols ➜ Umlaut ➜ Capital letters

7 Turn the Rotary knob [16] to select the desired character Turning the Rotary knob [16] clockwise moves the cursor to the next character, turning it counterclockwise moves the cursor to the previous character
8 Repeat steps 5 to 7 to enter up to 10 characters for the title
9 Press and hold ENT button [15] for 2 seconds or longer to store the title into memory and cancel title input mode

Clearing titles

1 Select and play a CD in the CD changer or tune in to a TV station for which you want to clear the title
2 Press DISP button [12] and display the main
3 Press TITLE button [2] "**TTL**" appears in the display and the display switches to title input display
4 Press BND button [11]
5 Press and hold ENT button [15] for 2 seconds or longer to clear the title and cancel title input mode

Adjusting the display contrast

You can adjust the display contrast to match the angle of installation of the unit

* The factory default setting is "**8**" (Adjustment level: 1 to 18)

1 Press and hold ADJ button [2] for 1 second or longer to switch to the adjustment selection display
2 Press the right or left side of SEARCH button [14] to select "**CONTRAST**"
3 Turn the Rotary knob [16] clockwise or counterclockwise to adjust the contrast
4 Press ADJ button [2] to return to the previous mode

Adjusting the dimmer level

You can adjust the reduced illumination level of the dimmer

* The factory default setting is "**3**"
* To use the dimmer, set the dimmer setting to 1 to 5

1 Press and hold ADJ button [2] for 1 second or longer to switch to the adjustment selection display
2 Press the right or left side of SEARCH button [14] to select "**DIMMER LV**"
3 Turn the Rotary knob [16] clockwise or counterclockwise to adjust the reduced illumination level of the dimmer

● **1 to 5:**

The dimmer operation is performed depending on the set level 1 to 5

● **OFF:**

No dimmer operation is performed

4 Press ADJ button [2] to return to the previous mode

Message display

When the unit is powered on or off, a message is displayed The user can turn this message display ON or OFF

* The factory default setting is "**ON**"

1 Press and hold ADJ button [2] for 1 second or longer to switch to the adjustment selection display
2 Press the right or left side of SEARCH button [14] to select "**MESSAGE**"
3 Turn the Rotary knob [16] clockwise or counterclockwise to set message display ON or OFF
4 Press ADJ button [2] to return to the previous mode

Turning the external output adjustment display on/off

When not using the external output, you can put out the "**NON-FADER**" display

* The factory default setting is "**ON**"
* Even if the level adjustment display is set to "**OFF**", signals can be output from the external output

1 Press and hold ADJ button [2] for 1 second or longer to switch to the adjustment selection display
2 Press the right or left side of SEARCH button [14] to select "**NON-FADER**"
3 Turn the Rotary knob [16] clockwise to set "**ON**" or counterclockwise to set "**OFF**"

● **ON:**

When you press A-M button [13], the "**NON-FAD VOL**" item is displayed

* The output level can be adjusted

● **OFF:**

Even when you press A-M button [13], the "**NON-FAD VOL**" item is not displayed

* The output level cannot be adjusted

4 Press ADJ button [2] to return to the previous mode

AUX function

This system has an external input jack so you can listen to sounds and music from external devices when connected to this unit

Selecting AUX IN sensitivity

Make the following settings to select the sensitivity when sounds from external devices connected to this unit are difficult to hear even after adjusting the volume

1 Press and hold the ADJ button [2] for 1 second or longer to set Adjust mode
2 Press the SEARCH button [14] and select "**AUX SENS**"
3 Turn the Rotary knob [16] clockwise or counterclockwise as needed and select from "**SENS HIGH**", "**SENS MID**" or "**SENS LOW**"

* The factory default setting is "**SENS MID**"

4 Press ADJ button [2] to return the previous mode

Setting the button illumination

* The factory default setting is "**ILLM GREEN**"

1 Press and hold the ADJ button [2] for 1 second or longer to set Adjust mode
2 Press the SEARCH button [14] and select "**KEY ILLUMI**"
3 Turn the Rotary knob [16] clockwise or counterclockwise as needed and select from "**ILLM GREEN**" and "**ILLM RED**"
4 Press ADJ button [2] to return the previous mode

Setting the method for Ttitle scroll

Set how to scroll in CD-TEXT or MD

* The factory default setting is "**ON**"

1 Press and hold the ADJ button [2] for 1 second or longer to set Adjust mode
2 Press the SEARCH button [14] and select "**AUTO SCROLL**"
3 Turn the Rotary knob [16] clockwise or counterclockwise and select "**ON**" or "**OFF**"

● **ON:**

To scroll automatically

● **OFF:**

To scroll just 1 time when the title was changed or the title key was pressed

4 Press ADJ button [2] to return the previous mode

Switching the screen saver

* The factory default setting is "**RANDOM**"

1 Press and hold the ADJ button [2] for 1 second or longer to set Adjust mode
2 Press the SEARCH button [14] and select "**AUTO SS**"
3 Turn the Rotary knob [16] clockwise or counterclockwise as needed to switch to "**SS OFF**" "**SS Ptn1**" ↔ "**SS Ptn2**" ↔ "**SS Ptn3**" ↔ "**SS RANDOM**" ↔ "**SS OFF**"
4 Press ADJ button [2] to return the previous mode

Setteng the clock

1 Press and hold the ADJ button [2] for 1 second or longer to set Adjust mode
2 Press the SEARCH button [14] and select "**CLOCK**"
3 Press ENT button [15]
4 Press the SEARCH button [14] to select the hour or the minute
5 Turn the Rotaly knob [16] clockwise or counterclockwise to set the correct time

* The clock is displayed in 12-hour format

6 Press ENT button [15] to store the time into memory
7 Press ADJ button [2] to return the previous mode

Note:

- *You cannot set the clock when it is displayed with only the ignition on If you drain or remove the car's battery or take out this unit, the clock is reset While setting the clock, if another button or operation is selected, the clock set mode is canceled*

English

English

CD Changer Operations

CD changer functions

When an optional CD changer is connected through the CeNET cable, this unit controls all CD changer functions This unit can control a total of 2 changers (MD and/or CD)

Press FNC button [3] and select the CD changer mode to start play If 2 CD changers are connected, press FNC button [3] to select the CD changer for play

* If "**NO MAGAZINE**" appears in the display, insert the magazine into the CD changer "**DISC CHECK**" appears in the display while the player loads (checks) the magazine
* If "**NO DISC**" appears in the display, eject the magazine and insert discs into each slot Then, reinsert the magazine back into the CD changer

⚠CAUTION

CD-ROM discs and CD-R discs cannot be played in the CD changer

Pausing play

1 Press Play/pause button [15] to pause play "**PAUSE**" appears in the display

2 To resume play, press Play/pause button [15] again

Displaying CD titles

This unit can display title data for CD-text CDs and user titles input with this unit

1 Press DISP button [12] to display the title

2 Each time you press and hold DISP button [12] for 1 second or longer, the title display changes in the following order

User title (disc) ➜ CD-text title (disc) ➜ Artist name ➜ CD-text title (track) ➜ user title (disc)

Note:

- *If the CD playing is not a CD-text CD or no user title has been input, "**NO-TITLE**" appears in the display*

Procedure to scroll a title

Set "**AUTO SCROLL**" to "**ON**" or "**OFF**" (The factory default setting is "**ON**" See p 17)

● **When set to "ON"**

The title is automatically kept scrolling

● **When set to "OFF"**

Press the TITLE button [2] to scroll the title

Selecting a CD

Each Direct button [9] corresponds to a disc loaded into the magazine

● **Selecting a disc from 1 to 6**

Press the corresponding Direct button [9] (1 to 6) to select the desired disc

● **Selecting a disc from 7 to 12 (only when a 12 disc CD changer is used)**

Press and hold Direct button [9] (7 to 12) for 1 second or longer to select the desired disc

* If a CD is not loaded in a slot of magazine, pressing Direct button [9] corresponding to its disc number is invalid

Selecting a track

● **Track-up**

1 Press the right side of SEARCH button [14] to move ahead to the beginning of the next track

2 Each time you press the right side of SEARCH button [14], the track advances ahead to the beginning of the next track

● **Track-down**

1 Press the left side of SEARCH button [14] to move back to the beginning of the current track

2 Press the left side of SEARCH button [14] twice to move to the beginning of the previous track

Fast-forward/fast-backward

● **Fast-forward**

Press and hold the right side of SEARCH button [14] for 1 second or longer

● **Fast-backward**

Press and hold the left side of SEARCH button [14] for 1 second or longer

Top function

The top function plays from the first track (track No 1) of the disc

● **When playing a disc 1 to 6**

Press Direct button [9] (1 to 6) with the same number as the CD playing

● **When playing a disc 7 to 12 (only when a 12 disc CD changer is used)**

Press and hold for 1 second or longer Direct button [9] (7 to 12) with the same number as the CD playing

* If a CD is not loaded in a slot of magazine, pressing Direct button [9] corresponding to its disc number is invalid

Scan play

The scan play locates and plays the first 10 seconds of each track on a disc automatically This function continues on the disc until it is cancelled

* The scan play is useful when you want to select a desired track

1 Press SCN button [5] to start track scanning "**SCN**" lights in the display

2 To cancel the scan play, press SCN button [5] again "**SCN**" goes off from the display and the current track continues to play

Disc scan play

The disc scan play locates and plays the first 10 seconds of the first track on each disc in the currently selected CD changer This function continues automatically until it is cancelled

* The disc scan play is useful when you want to select a desired CD

1 Press and hold SCN button [5] for 1 second or longer "**DISC**" and "**SCN**" light in the display and the disc scan play starts

2 To cancel the disc scan play, press SCN button [5] again "**DISC**" and "**SCN**" go off from the display and the current track continues to play

Repeat play

The repeat play continuously plays the current track This function continues automatically until it is cancelled

1 Press RPT button [6] "**RPT**" lights in the display and the current track is repeated

2 To cancel the repeat play, press RPT button [6] again "**RPT**" goes off from the display and normal play resumes

Disc repeat play

After all the tracks on the current disc have been played, the disc repeat play automatically replays the current disc over from the first track This function continues automatically until it is cancelled

1 Press and hold RPT button [6] for 1 second or longer "**DISC**" and "**RPT**" light in the display and the disc repeat play starts

2 To cancel the disc repeat play, press and hold RPT button [6] again "**DISC**" and "**RPT**" go off from the display and normal play resumes on the current track

Random play

The random play selects and plays individual tracks on the disc in no particular order This function continues automatically until it is cancelled

1 Press RDM button [7] "**RDM**" lights in the display and the random play begins

2 To cancel the random play, press RDM button [7] again "**RDM**" goes off from the display and normal play resumes

Disc random play

The disc random play selects and plays individual tracks or discs automatically in no particular order This function continues automatically until it is cancelled

1 Press and hold RDM button [7] for 1 second or longer "**DISC**" and "**RDM**" light in the display and the disc random play starts

2 To cancel the disc random play, press and hold RDM button [7] again "**DISC**" and "**RDM**" go off from the display and normal play resumes from the current track

English

MD Changer Operations

MD changer functions

When an optional MD changer is connected through the CeNET cable, this unit controls all MD changer functions This unit can control a total of 2 changers (MD and/or CD)

Press FNC button [3] and select the MD changer mode to start play If 2 MD changers are connected, press FNC button [3] to select the MD changer for play

* If "**NO DISC**" appears in the display, load MDs into the MD changer

Pausing play

1 Press Play/pause button [15] to pause play "**PAUSE**" appears in the display

2 To resume play, press Play/pause button [15] again

Switching disc titles and track titles

This unit can display disc titles and track titles already entered on MDs Titles up to 128 characters long can be displayed by scrolling the titles

* Titles cannot be entered for MDs with this unit

1 Press DISP button [12] to display the title The disc title or track title is displayed

2 Each time you press and hold DISP button [12] for 1 second or longer, the display toggles between the disc title and the track title

Procedure to scroll a title

Set "**AUTO SCROLL**" to "**ON**" or "**OFF**" (The factory default setting is "**ON**" See p 17)

● **When set to "ON"**

The title is automatically kept scrolling

● **When set to "OFF"**

Press the TITLE button [2] to scroll the title

Selecting an MD

Each Direct button [9] corresponds to an MD loaded into the MD changer Press the corresponding Direct button [9] (1 to 6) to select the desired disc

* If an MD is not loaded in a slot of MD changer, pressing Direct button [9] corresponding to its disc number is invalid

Selecting a track

● **Track-up**

1 Press the right side of SEARCH button [14] to move ahead to the beginning of the next track

2 Each time you press the right side of SEARCH button [14], the track advances ahead to the beginning of the next track

● **Track-down**

1 Press the left side of SEARCH button [14] to move back to the beginning of the current track

2 Press the left side of SEARCH button [14] twice to move to the beginning of the previous track

Fast-forward/fast-backward

● **Fast-forward**

Press and hold the right side of SEARCH button [14] for 1 second or longer

● **Fast-backward**

Press and hold the left side of SEARCH button [14] for 1 second or longer

Top function

The top function plays from the first track (track No 1) of the disc Press Direct button [9] (1 to 6) with the same number as the MD playing

* If an MD is not loaded in a slot of MD changer, pressing Direct button [9] corresponding to its disc number is invalid

Scan play

The scan play locates and plays the first 10 seconds of each track on a disc automatically This function continues on the disc until it is cancelled

* The scan play is useful when you want to select a desired track

1 Press SCN button [5] to start track scanning "**SCN**" lights in the display

2 To cancel the scan play, press SCN button [5] again "**SCN**" goes off from the display and the current track continues to play

Disc scan play

The disc scan play locates and plays the first 10 seconds of the first track on each disc in the currently selected MD changer This function continues automatically until it is cancelled

* The disc scan play is useful when you want to select a desired MD

1 Press and hold SCN button [5] for 1 second or longer "**DISC**" and "**SCN**" light in the display and the disc scan play starts

2 To cancel the disc scan play, press and hold SCN button [5] again "**DISC**" and "**SCN**" go off from the display and the current track continues to play

Repeat play

The repeat play continuously plays the current track This function continues automatically until it is cancelled

1 Press RPT button [6] "**RPT**" lights in the display and the current track is repeated
2 To cancel the repeat play, press RPT button [6] again "**RPT**" goes off from the display and normal play resumes

Disc repeat play

After all the tracks on the current disc have been played, the disc repeat play automatically replays the current disc over from the first track This function continues automatically until it is cancelled

1 Press and hold RPT button [6] for 1 second or longer "**DISC**" and "**RPT**" light in the display and the disc repeat play starts
2 To cancel the disc repeat play, press and hold RPT button [6] again "**DISC**" and "**RPT**" go off from the display and normal play resumes on the current track

Random play

The random play selects and plays individual tracks on the disc in no particular order This function continues automatically until it is cancelled

1 Press RDM button [7] "**RDM**" lights in the display and the random play begins
2 To cancel the random play, press RDM button [7] again "**RDM**" goes off from the display and normal play resumes

Disc random play

The disc random play selects and plays individual tracks or discs automatically in no particular order This function continues automatically until it is cancelled

1 Press and hold RDM button [7] for 1 second or longer "**DISC**" and "**RDM**" light in the display and the disc random play starts
2 To cancel the disc random play, press and hold RDM button [7] again "**DISC**" and "**RDM**" go off from the display and normal play resumes from the current track

TV Operations

TV tuner functions

When an optional TV tuner is connected through the CeNET cable, this unit controls all TV tuner functions To watch TV requires a TV tuner and monitor

Watching a TV

1 Press FNC button [3] and select the TV mode
2 Press BND button [11] to select the desired TV band (TV1 or TV2) Each time the button is pressed, the input selection toggles between TV1 and TV2
3 Press the right or left side of SEARCH button [14] to tune in the desired TV station

Watching a video

The TV tuner has a VTR input terminal to which 1 external device can be connected Connect a 12 V video cassette player (VCP) or video cassette recorder (VCR) to the TV tuner input terminal

1 Press RDM button [7] to select VTR
2 To return to the TV broadcast, press RDM button [7]

Tuning

There are 3 types of tuning mode available, Seek tuning, manual tuning and preset tuning

Seek tuning

1 Press BND button [11] and select the desired TV band (TV1 or TV2)
   * If "**MANU**" is lit in the display, press and hold BND button [11] for 1 second or longer "**MANU**" in the display goes off and seek tuning is now available
2 Press the right or left side of SEARCH button [14] to automatically seek a station Press the right side of SEARCH button [14] to automatically tune up the frequency band to the next available TV station, press the left side to automatically tune down

Manual tuning

There are 2 ways available: Quick tuning and step tuning

When you are in the step tuning mode, the frequency changes one step at a time In quick tuning mode, you can quickly tune the desired frequency

English

English

1 Press BND button [11] and select the desired band (TV1 or TV2)
   * If "**MANU**" is not lit in the display, press and hold BND button [11] for 1 second or longer "**MANU**" lights in the display and manual tuning is now available
2 Tune into a station

● **Quick tuning:**

Press and hold the right or left side of SEARCH button [14] for 1 second or longer to tune in a station

● **Step tuning:**

Press the right or left side of SEARCH button [14] to manually tune in a station

Recalling a preset station

A total of 12 TV stations can be stored (6-TV1 and 6-TV2) This allows you to select your favorite TV stations and store them in memory for later recall

1 Press BND button [11] and select the desired TV band (TV1 or TV2)
2 To recall a stored TV station, press the desired Preset button [9] to select that station
   * Press and hold one of Preset buttons [9] for 2 seconds or longer to store the current station into the preset memory

Manual memory

1 Select the desired station with seek tuning, manual tuning or preset tuning
2 Press and hold one of Preset buttons [9] for 2 seconds or longer to store the current station to that preset memory

Auto store

Auto store selects 6 TV stations automatically and stores each one into a preset memory

If there are not 6 stations with good reception, stations previously stored in memory remain and only the strong stations are stored into memory

1 Press BND button [11] and select the desired TV band (TV1 or TV2)
2 Press and hold AS button [5] for 2 seconds or longer The stations with good reception are stored automatically to the preset channels

Preset scan

Preset scan allows the user to view each preset position before it automatically advances to the next preset This function is useful for searching for desired TV station in memory

1 Press PS button [5]
2 When the desired station is found, press PS button [5] again to remain tuned to that station

Note:

- *Do not press and hold PS button [5] for 2 seconds or longer Doing so will trigger the auto store function and start storing stations into memory.*

Setting the TV diver

You can change the reception setting for the TV antenna connected to the TV tuner

1 Press and hold ADJ button [2] for 1 second or longer to switch to the adjustment selection display
2 Press the right or left side of SEARCH button [14] to select "**TV DIVER**"
3 Turn the Rotary knob [16] clockwise to set to "**ON**" or counterclockwise to set to "**OFF**"

   ● **ON:**

   Sets reception emphasizing the visual

   ● **OFF:**

   Sets the diver setting to OFF
4 Press ADJ button [2] to return to the previous mode

DSP control function

If the DSP (DPH910), sold separately, is connected to this unit using the CeNET cable, all functions of the AC Processor can be controlled

DSF functions

There are 2 modes available in DPH910, STD mode and professional mode Choose one of them and adjust the sound field and the sound quality

* STD mode: Standard mode

● **Functions common to each mode:**

Auto loudness, etc

● **Standard mode:**

Adjustment using the graphic equalizer function and the DSF function

● **Professional mode:**

Adjustment using the VSE function and the parametric equalizer function

* When the STD mode is selected, adjustment for the professional mode cannot be made On the contrary, when the professional mode is selected, adjustment for the STD mode cannot be made
* **For details on functions of each mode, refer to the owner's manual supplied with the DPH910**
* Hereafter the graphic equalizer is referred to as a G EQ, the space equalizer referred to as VSE and the parametric equalizer referred to as P EQ

Operations common to each mode

Output adjustment of auto loudness, subwoofer and playback band

1 Press and hold ADJ button [2] for 1 second or longer to switch to the adjustment selection display

2 Press the right or left side of SEARCH button [14] to select "**SOUND**"

3 Press ENT button [15]

4 Press the right or left side of SEARCH button [14] to select the adjustment item

There are "**A LD LEVEL**", "**WOOFER OUT**", "**WOOFER LPF**", "**HPF**" and "**TEST TONE**" available for the adjustment items

* For details on each adjustment item, refer to the owner's manual supplied with the DPH910

5 Turn the Rotary knob [16] clockwise or counterclockwise to make the adjustment

6 Pressing ENT button [15] returns to the adjustment selection display

7 Press ADJ button [2] to return to the previous mode

Selecting the easy mode or the professional mode

* The factory default setting is "**STD**"

1 Press and hold ADJ button [2] for 1 second or longer to switch to the adjustment selection display

2 Press the right or left side of SEARCH button [14] to select "**AC-P SEL**"

3 Turn the Rotary knob [15] clockwise or counterclockwise to set the mode to "**STD**" or "**PRO**"

4 Press ADJ button [2] to return to the previous mode

Entering titles

You can give a title to the user memory of the DSF, G EQ, VSE and P EQ that you have adjusted yourself

1 Press A-M button [13] to select the adjustment mode in which you want to give a title

2 Press BND button [11] to select "**USR**" "**USR**" will be displayed in the operation status indication [21]

3 Press one of Preset buttons [9] to select the user memory to which you want to give a title

4 Press TITLE button [2]

5 Press the right or left side of SEARCH button [14] to move the cursor

6 Press DISP button [12] to select the character fonts

There are capital letters, small letters, numbers, symbols and umlaut available for the character

7 Turn the Rotary knob [16] clockwise or counterclockwise to select the character you want to input

8 Repeat steps 5 to 7 to input the title

9 Press and hold ENT button [15] for 2 seconds or longer to put the title into memory The title input mode is cancelled

STD mode/G.EQ operations

Note:

- *The adjustment made in standard mode is not reflected in the adjustment in professional mode On the contrary, the adjustment made in professional mode is not reflected in the adjustment in easy mode*

English

English

G.EQ effect ON/OFF

While the "**G EQ**" indication 18 is lit in the display, the G EQ effect is set to "**ON**"

* The factory default setting is "**ON**"

1 Press A-M button 13 and select "**G EQ**"

2 Press DISP button 12

3 Press A-M button 13 "**G EQ**" in the display lit or unlit

* When "**G EQ**" is unlit, the G EQ effect is set to OFF

Note:

- *If the G EQ effect is set to OFF, the adjustment made in "**G EQ operations**" is not reflected in the music source*

Selecting a G.EQ menu

1 Press A-M button 13 and select "**G EQ**"

2 Press BND button 11 to select "**BASC**" (basic) "**BASC**" is displayed in the operation status indication 21 in the display

3 Press one of Direct buttons 9 and select the desired G EQ menu

* To select the user memory, press BND button 11 to select "**USR**" and press one of Direct buttons 9

Editing/storing a G.EQ menu (User memory)

1 Select a G EQ menu which you want to edit on the basis of

2 Press and hold ADJ button 2 for 1 second or longer

3 Press the right or left side of SEARCH button 14 to select the frequency to be adjusted There are 50Hz, 100Hz, 200Hz, 400Hz, 1kHz, 3kHz and 12kHz available for the adjustment frequency

* For details on each adjustment item, refer to the owner's manual supplied with the DPH910

4 Turn the Rotary knob 16 clockwise or counterclockwise to make the adjustment The adjustment range is from –6 to 6

5 Repeat steps 3 to 4 to complete the adjustment and press ADJ button 2

6 Press and hold one of Direct buttons 9 for 2 seconds or longer to store the edited contents

* You can give a title to the user memory For the inputting method of titles, refer to the subsection "**Entering titles**" in section "**Operations common to each mode**"

STD mode/DSF operations

DSF effect ON/OFF

When the "**DSF**" indication 5 is lit in the display, the DSP effect is set to "**ON**"

* The factory default setting is "**ON**"

1 Press A-M button 13 and select "**DSF**"

2 Press DISP button 12

3 Press A-M button 13 "**DSF**" in the display lit or unlit

* When "**DSF**" is unlit, the DSF effect is set to OFF

Note:

- *If the DSF effect is set to OFF, the adjustment made in "**DSF operations**" is not reflected in the music source*

Setting the listening position menu

1 Press A-M button 13 and select "**DSF**"

2 Press the right or left side of SEARCH button 14 to set the listening position type

There are FULL SEAT, FRONT-R, FRONT-L, FRONT (only front seats), REAR (only rear seats) and PASS available for the listening position types

* The factory default setting is "**FULL SEAT**"

Making fine adjustment of the listening position

1 Upon completion of setting the listening position, press ENT button 15

2 Press the right or left side of SEARCH button 14 to select "**BALANCE**" or "**FADER**" The selected item blinks

3 Turn the Rotary knob 16 clockwise or counterclockwise to adjust the balance and the fader

4 Press ENT button 15 to return to the DSF mode

Selecting a sound field menu

1 Press A-M button 13 and select "**DSF**" "**DSF**" blinks in the display

2 Press BND button 11 to select "**BSC1**" (basic-1) or "**BSC2**" (basic-2) "**BSC1**" or "**BSC2**" is displayed in the operation status indication 21 in the display

3 Press one of Direct buttons 9 and select the desired sound field menu

* To select the user memory, press BND button 11 to select "**USR**" and press one of Direct buttons 9

Editing/storing a sound field menu (User memory)

1 Select a sound field menu which you want to edit on the basis of
2 Press and hold ADJ button [2] for 1 second or longer
3 Press the right or left side of SEARCH button [14] to select the item to be adjusted

There are "**EFFECT**", "**DELAY**", "**REAR MIX**", "**REV TIME**" or "**ROOM SIZE**" and "**HIGH**" or "**LIVENESS**" available for the items to be adjusted

* For details on each adjustment item, refer to the owner's manual supplied with the DPH910

4 Turn the Rotary knob [16] clockwise or counterclockwise to make the adjustment
5 Repeat steps 3 to 4 to complete the adjustment and press ADJ button [2]
6 Press and hold one of Direct buttons [9] for 2 seconds or longer to store the edited contents

* You can give a title to the user memory For the inputting method of titles, refer to the subsection "**Entering titles**" in section "**Operations common to each mode**"

Professional mode/VSE operations

Note:

- *The adjustment made in professional mode is not reflected in the adjustment in standard mode On the contrary, the adjustment made in standard mode is not reflected in the adjustment in professional mode*

VSE effect ON/OFF

While the "**VSE**" indication **4** is lit in the display, the VSE effect is set to "**ON**"

* The factory default setting is "**ON**"

1 Press A-M button [13] and select "**VSE**"
2 Press DISP button [12]
3 Press A-M button [13] "**VSE**" in the display lit or unlit

* When "**VSE**" is unlit, the VSE effect is set to OFF

Note:

- *If the VSE effect is set to OFF, the adjustment made in "**VSE operations**" is not reflected in the music source*

Selecting an VSE menu

1 Press A-M button [13] and select "**VSE**"
2 Press BND button [11] to select "**BASC**" (basic) "**BASC**" is displayed in the operation status indication **21** in the display
3 Press one of Direct buttons [9] and select the desired VSE menu

* To select the user memory, press BND button [11] to select "**USR**" and press one of Direct buttons [9]

Editing/storing an VSE menu (User memory)

1 Select an VSE menu which you want to edit on the basis of
2 Press and hold ADJ button [2] for 1 second or longer
3 Press the right or left side of SEARCH button [14] to select the item to be adjusted

There are "**DIFFUSE**", "**CAR WIDTH**" and "**CAR LENG**" available for the items to be adjusted

* For details on each adjustment item, refer to the owner's manual supplied with the DPH910

4 Turn the Rotary knob [16] clockwise or counterclockwise to make the adjustment The adjustment range is from 1 to 10 for each item
5 Repeat steps 3 to 4 to complete the adjustment and press ADJ button [2]
6 Press and hold one of Direct buttons [9] for 2 seconds or longer to store the edited contents

* You can give a title to the user memory For the inputting method of titles, refer to the subsection "**Entering titles**" in section "**Operations common to each mode**"

Professional mode/P.EQ operations

P.EQ effect ON/OFF

While the "**P EQ**" indication **16** is lit in the display, the P.EQ effect is set to "**ON**"

* The factory default setting is "**ON**"

1 Press A-M button [13] and select "**P EQ**"
2 Press DISP button [12]
3 Press A-M button [13] "**P EQ**" in the display is changed from blinking to lit or unlit

* When "**P.EQ**" is unlit, the P EQ effect is set to OFF

Note:

- *If the P.EQ effect is set to OFF, the adjustment made in "**P.EQ operations**" is not reflected in the music source*

English

Selecting a P.EQ menu

1 Press A-M button [13] and select "**P.EQ**" "**P EQ**" blinks in the display

2 Press BND button [11] to select "**BASC**" (basic) "**BASC**" is displayed in the operation status indication [21] in the display

3 Press one of Direct buttons [9] and select the desired P.EQ menu

* To select the user memory, press BND button [11] to select "**USR**" and press one of Direct buttons [9]

Editing/storing a P.EQ menu (User memory)

1 Select a P.EQ menu which you want to edit on the basis of

2 Press and hold ADJ button [2] for 1 second or longer

3 Press the right or left side of SEARCH button [14] to select the item to be adjusted

There are correction channel, correction band, selection of the centre frequency, gain adjustment and selection of the Q-curve available for the items to be adjusted

* For details on each adjustment item, refer to the owner's manual supplied with the DPH910

4 Turn the Rotary knob [16] clockwise or counterclockwise to make the adjustment

5 Repeat steps 3 to 4 to complete the adjustment and press ADJ button [2]

6 Press and hold one of Direct buttons [9] for 2 seconds or longer to store the edited contents

* You can give a title to the user memory For the inputting method of titles, refer to the subsection "**Entering titles**" in section "**Operations common to each mode**"

Digital Radio / DAB Operations

DAB control function

When a CeNET cable is used to connect a DAB (DAH913) (sold separetely), all functions can be operated

Listening to the DAB station

1 Press FNC button [3] to select DAB mode

2 When the unit receives a DAB station, the display changes in the following order

Frequency channel ➜ service label

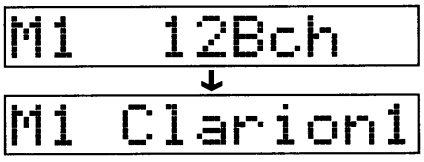

Switching displays

Press the DISP button for 1 second during the Main (service label) display to select Main (service label) or Sub (PTY)

Note:

- *The display shown in the normal reception mode and the preset reception mode is the same when a DAB station is received*

3 When the unit does not receive a DAB station, the display changes in the following order

–Normal reception mode–

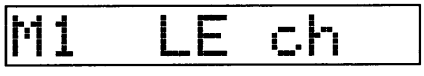

–Preset reception mode–

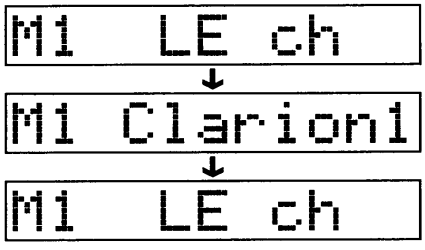

Notes:

- *The number of programmes and broadcasting times depend on the DAB stations*
- *When the strength of DAB signals is weak, audio output is muted*

Seek tuning

1 Press FNC button [3] to select DAB mode

2 Press and hold right or left for 1 second or longer using SEARCH button [14]

∗ "**SEEK**" appears in the display

3 "**DAB**" lights up in the display when the main unit receives a DAB station

∗ The main unit stops the seek tuning when it cannot find a DAB station The display returns to the previous mode

Manual tuning

1 Press FNC button [3] to select DAB mode

2 Press and hold BND button [11] for 1 second or longer "**MANU**" lights up in the display

3 Press the right or left SEARCH button [14] to select a station

∗ If no operation is performed for more than 7 seconds, manual tuning is cancelled and the display returns to the previous mode

Switching programmes

1 Press FNC button [3] to receive a DAB station

2 Press the right or left SEARCH button [14] to switch programmes in the DAB station

Note:

- *The programme name may be the same depending on DAB programmes*

Programme scan

This function scans through each receivable programme in a DAB station being received for 10 seconds sequentially This is useful when you want to search for a desired programme

1 Press FNC button [3] to receive a DAB station

2 Perform the following operation depending on the connected model

Press SCN button [5] "**SCAN**" lights up and the unit starts scanning each programme for 10 seconds sequentially Each time the main unit scans, the programme name is shown in the display

3 To stop programme scan when a desired programme is tuned in

Press SCN button [5]

English

Manual memory

The main unit has a manual memory function for DAB programmes Up to 18 programmes (6 programmes each) can be preset in the preset buttons

[M1], [M2] and [M3]

1 Press FNC button [3] to select DAB mode
2 Press BND button [11] to select any one shown above
3 Press the right or left SEARCH button [14] to select a desired programme
4 Press and hold one of Preset buttons (1 to 6) [9] for 2 seconds or longer to store the programme

Note:

- *The interrupt programme (PTY or INFO) cannot be written into a manual memory.*

Recalling a preset programme

1 Press FNC button [3] to select DAB mode
2 Press BND button [11] Each time you press BND button [11], the display changes in the following order:

[M1] ➜ [M2] ➜ [M3] ➜ [M1]

3 Press one of Preset buttons [9] to recall a preset programme

Note:

- *Press and hold Preset button [9] for 2 seconds or longer to store the programme currently being received (Manual memory)*

AF function

The AF function switches to a different frequency on the same network in order to maintain optimum reception

* The factory default setting is "**ON**"
* If the reception of the current broadcast station deteriorates, "**SEARCH**" appears in the display and the radio searches for the same programme on another frequency

● Switching OFF the AF function

Press AF (RPT) button [6] "**AF**" in the display goes off and the AF function turns off

● Switching ON the AF function

Press AF (RPT) button [6] "**AF**" in the display lights and the AF function turns on

* If the reception of the current broadcast station deteriorates, "**SEARCH**" appears in the display and the radio searches for the same programme on another frequency

TA (Traffic Announcement)

In TA standby mode, when a traffic announcement broadcast starts, the traffic announcement broadcast is received as top priority regardless of the function mode Traffic programme (TP) automatic tuning is also possible

* This function can only be used when "**TP**" is lit in the display When "**TP**" is lit, this means that the DAB broadcast station being received has traffic announcement programmes

● Setting TA standby mode

If you press TA (ISR) button [10] when only "**TP**" is lit in the display, "**TP**" and "**TA**" light in the display and the unit is set into TA standby mode until a traffic announcement is broadcast When a traffic announcement broadcast starts, "**TRA INFO**" appears in the display If you press TA (ISR) button [10] while a traffic announcement broadcast is being received, the traffic announcement broadcast reception is cancelled and the unit goes into TA standby mode

● Cancelling TA standby mode

With "**TP**" and "**TA**" lit in the display, press TA (ISR) button [10] The "**TA**" in the display goes off and TA standby mode is cancelled

* If "**TP**" is not lit, pressing TA (ISR) button [10] searches for a TP station

● Searching for a TP station

When "**TP**" is not lit, if you press TA (ISR) button [10], "**TA**" in the display lights and the unit automatically receives a TP station

Note:

- *If a TP station is not received, the unit continues the search operation Pressing TA (ISR) button [10] again goes off "**TA**" in the display and stops TP station searching*

INFO (Announcement)

In INFO standby mode, when the selected announcement programme starts, the main unit switches to the selected announcement programme automatically

M1 Event

● Setting INFO standby mode

If you press and hold TA (ISR) button [10] for 1 second or longer, "**INFO**" lights in the display and the main unit is set into INFO standby mode until the selected announcement is broadcast When the selected announcement broadcast starts, the announcement item appears in the display If you press and hold TA (ISR) button [10] for 1 second or longer while the selected announcement broadcast is being received, the selected announce-

ment broadcast reception is cancelled and the main unit goes into INFO standby mode

● **Cancelling INFO standby mode**

To cancel INFO standby mode, press and hold TA (ISR) button [10] for 1 second or longer

● **Information select**

This is a function for selecting INFORMATION ON or OFF in Information interrupt mode

You can set ON up to 6 information items

You can select any of the 6 items below

INFORMATION item	
ENGLISH	**Contents**
Travel	Transport flash
Warning	Warning / Service
News	News flash
Weather	Area weather flash
Event	Event announcement
Special	Special event

1 Perform the following operation depending on the connected model

Press and hold ADJ button [2] for 1 second or longer

2 Press the right or left SEARCH button [14] to select "**INFO SEL**", then push ENT button [15] to enter "**INFO SEL**" mode

3 Press the right or left SEARCH button [14] to select an information item You can select any of 6 items

4 Perform the following operation depending on the connected model

Turn the Rotary knob [16] clockwise or counterclock wise to set the information item for ON or OFF

5 Press ADJ button [2] to return to the previous display

PTY

This function enables you to listen to the selected programme type, irrespective of the function mode

* PTY broadcasts are not yet available in all countries
* In INFO standby mode, INFO stations have priority over PTY stations
* In TA standby mode, TP stations have priority over PTY stations

PTY item	
ENGLISH	**Contents**
News	News
Inform	Information
Sports	Sports
Talk	Talk
Rock	Rock
Cls Rock	Classic Rock
Adlt Hit	Adult Hits
Soft Rck	Soft Rock
Top 40	Top 40
Country	Country
Oldies	Oldies
Soft	Soft
Nostalga	Nostalgia
Jazz	Jazz
Classicl	Classical
R&B	Rhythm and Blues
Soft R&B	Soft Rhythm and Blues
Language	Language
Rel Musc	Religious Music
Rel Talk	Religious Talk
Persnlty	Personality
Public	Public

● **Setting PTY standby mode**

When you press PTY (RDM) button [7], "**PTY**" lights in the display and the PTY standby mode is turned on When the selected PTY broadcast starts, the PTY item name appears in the display

● **Cancelling PTY standby mode**

When you press and hold PTY (RDM) button [7] for 1 second or longer, "**PTY**" goes off in the display and PTY standby mode is cancelled

● **Cancelling a PTY interrupt broadcast**

Press PTY (RDM) button [7] during the PTY interrupt broadcast, the PTY interrupt is cancelled and the unit returns to PTY standby mode

English

English

Selecting PTY

1 When you press PTY (RDM) button [7], the unit goes into PTY select mode

2 Press any one of Preset buttons [9] Alternatively, turn the Rotary knob [16] clockwise or counterclockwise to select the desired PTY

* Below are the factory default settings stored for Preset buttons [9]

Preset number	PTY item	
	ENGLISH	Contents
1	**News**	News
2	**Top40**	Top40
3	**Country**	Country
4	**Soft**	Soft
5	**Classicl**	Classical
6	**R&B**	Rhythm and Blues

3 The PTY select mode is cancelled automatically 7 seconds after a PTY is selected

PTY seek

1 When you press PTY (RDM) button [7], the PTY select mode is turned on

2 Select PTY

3 Press the right or left side of SEARCH button [14] If you press the right side, the unit seeks a PTY broadcast moving up the frequencies, if you press the left side, it seeks moving down the frequencies

* If no station with the selected PTY broadcast can be received, the unit returns to PTY select mode

PTY preset memory

1 When you press PTY (RDM) button [7], the PTY select mode is turned on

2 Turn the Rotary knob [16] clockwise or counterclockwise to select the desired PTY

The 22 types of PTY below can be selected

3 If you press and hold any one of Preset buttons [9] for 2 seconds or longer, the selected PTY is stored into that preset channel memory

Emergency broadcast

When an emergency broadcast is received, all the function mode operations are stopped "**ALARM**" appears in the display and the emergency broadcast can be heard

● **Cancelling an emergency broadcast**

If you press AF (RPT)button [6], emergency broadcast reception is cancelled

Switching the PTY and INFO display language

You can select one of 2 languages (English or French) for the PTY and INFO shown in the display

* The factory default setting is "**English**"

1 Press and hold ADJ button [2] for 1 second or longer to switch to the adjustment selection display

2 Press the right or left side of SEARCH button [14] and select "**LANGUAGE**"

3 Turn the Rotary knob [16] clockwise or counterclockwise to select the desired language

4 Press ADJ button [2] to return to the previous mode

Volume setting of TA, INFO, emergency broadcast (ALARM) and PTY

The volume for TA, INFO, ALARM and PTY interrupts can be set during TA, INFO, ALARM and PTY interrupt Perform the following operation depending on the connected model

* The factory default setting is "**15**"

During a TA, INFO, ALARM or PTY interrupt, turn the Rotary knob [16] clockwise or counterclockwise to set the volume to a desired level (0 to 33)

* When the TA, INFO, ALARM or PTY interrupt ends, the volume returns to the level it had before the interrupt

DVD Operations

Operation

● Play/Still operation

Press the ENT button [15] to select the desired mode (play, still (pause))

Each time the button is pressed, the mode changes cyclically

● Chapter up/down operation (FF/FB operation)

Press the right side of SEARCH button [14] for 1 second or shorter to increment chapters

Hold down the right side of SEARCH button [14] for 1 second or longer to fast forward

Press the left side of SEARCH button [14] for 1 second or shorter to decrement chapters

Hold down the left side of SEARCH button [14] for 1 to fast backward

● Slow playback

When a DVD disc is being played back and in still mode, hold down the right side of SEARCH button [14] for 1 second or longer

English

9. TROUBLESHOOTING

	Problem	Cause	Measure
General	Power does not turn on (No sound is produced)	Fuse is blown	Replace with a fuse of the same amperage If the fuse blows again, consult your store of purchase
		Incorrect wiring	Consult your store of purchase
	No sound output when operating the unit with amplifiers or power antenna attached	Power antenna lead is shorted to ground or excessive current is required for remote-on the amplifiers or power antenna	1 Turn the unit off 2 Remove all wires attached to the power antenna lead Check each wire for a possible short to ground using an ohm meter 3 Turn the unit back on 4 Reconnect each amplifier remote wire to the power antenna lead one by one If the amplifiers turn off before all wires are attached, use an external relay to provide remote-on voltage (excessive current required)
	Nothing happens when buttons are pressed Display is not accurate	The microprocessor has malfunctioned due to noise, etc	Turn off the power, then press the RELEAS button [1] and remove the DCP. Press the reset button for about 2 seconds with a thin rod Reset button
		DCP or source unit connectors are dirty	Wipe the dirt off with a soft cloth moistened with cleaning alcohol
CD	Compact disc cannot be loaded	Another compact disc is already loaded	Eject the compact disc before loading the new one
	Sound skips or is noisy	Compact disc is dirty	Clean the compact disc with a soft cloth
		Compact disc is heavily scratched or warped	Replace with a compact disc with no scratches
	Sound is bad directly after power is turned on	Water droplets may form on the internal lens when the car is parked in a humid place	Let dry for about 1 hour with the power on

English

10. ERROR DISPLAYS

If an error occurs, one of the following displays is displayed
Take the measures described below to eliminate the problem

	Error Display	Cause	Measure
CD	**ERROR 2**	A CD is caught inside the CD deck and is not ejected	This is a failure of CD deck's mechanism and consult your store of purchase
	ERROR 3	A CD cannot be played due to scratches, etc	Replace with a non-scratched, non-warped-disc
	ERROR 6	A CD is loaded upside-down inside the CD deck and does not play	Eject the disc then reload it properly
CD changer	**ERROR 2**	A CD inside the CD changer is not loaded	This is a failure of CD changer's mechanism and consult your store of purchase
	ERROR 3	A CD inside the CD changer cannot be played due to scratches, etc	Replace with a non-scratched, non-warped disc
	ERROR 6	A CD inside the CD changer cannot be played because it is loaded upside-down	Eject the disc then reload it properly
MD changer	**ERROR H**	Displayed when the temperature in the MD changer is too high and playback has been stopped automatically	Lower the surrounding temperature and wait for a while to cool off MD changer
	ERROR 2	An MD inside the MD changer is not loaded	This is a failure of MD changer's mechanism and consult your store of purchase
	ERROR 3	An MD inside the MD changer cannot be played due to scratches, etc	Replace with a non-scratched, non-warped disc
	ERROR 6	An MD inside the MD changer cannot be played because it is loaded upside-down	Eject the disc then reload it properly
		Displayed when a non-recorded MD is loaded in the MD changer	Load a pre-recorded MD in the MD changer

If an error display other than the ones described above appears, press the reset button If the problem persists, turn off the power and consult your store of purchase

English

11. SPECIFICATIONS

English

FM Tuner

Frequency Range 87 9 MHz to 107 9 MHz
Usable Sensitivity 11 dBf
50dB Quieting Sensitivity: 17 dBf
Alternate Channel Selectivity: 75 dB
Stereo Separation (1 kHz) 35 dB
Frequency Response (±3 dB): 30 Hz to 15 kHz

AM Tuner

Frequency Range 530 kHz to 1710 kHz
Usable Sensitivity 25 μV

CD Player

System Compact disc digital audio system
Usable Discs Compact disc
Frequency Response (±1 dB) 5 Hz to 20 kHz
Signal to Noise Ratio (1 kHz) 100 dB
Dynamic Range (1 kHz) 95 dB
Harmonic Distortion 0 01%

DXZ715 only

Audio

Maximum Power Output:
200 W (50 W × 4 ch) (EIAJ)
Continuous Average Power Output:
18 W × 4, into 4 Ω, 20 Hz to 20 kHz, 1%THD
Bass Control Action (30 Hz) +15 dB, -12dB
MID Control Action (1kHz): ±12 dB
Treble Control Action (10 kHz) ±12 dB
Line Output Level (CD 1 kHz) 4 V

General

Power Supply Voltage:
14 4 V DC (10 8 to 15 6 V allowable), negative ground
Current Consumption Less than 15 A
Speaker Impedance
4 Ω (4 Ω to 8 Ω allowable)
Weight / Source unit 3 75 lb (1 7 kg)
Weight / Remote control unit
1 oz (30 g) (including battery)
Dimensions / Source unit
7″ (Width) × 2″ (Height) × 6-1/8″ (Depth)
[178 (W) × 50 (H) × 155 (D) mm]
Dimensions / Remote control unit
1-3/4″ (Width) × 4-5/16″ (Height) × 1-1/8″ (Depth)
[44 (W) × 110 (H) × 27 (D) mm]

HX-D10 only

Audio

Bass Control Action (30 Hz) +15 dB, -12dB
MID Control Action (1kHz) ±12 dB
Treble Control Action (10 kHz) ±12 dB
Line Output Level (CD 1 kHz) 4 V

General

Power Supply Voltage
14 4 V DC (10 8 to 15 6 V allowable), negative ground
Current Consumption Less than 3 A
Weight / Source unit: 3 53 lb (1 6 kg)
Weight / Remote control unit
1 oz (30 g) (including battery)
Dimensions / Source unit
7″ (Width) × 2″ (Height) × 6-1/8″ (Depth)
[178 (W) × 50 (H) × 155 (D) mm]
Dimensions / Remote control unit
1-1/4″ (Width) × 2-3/16″ (Height) × 15/16″ (Depth)
[32 (W) × 56 (H) × 24 (D) mm]

Notes:
- *Specifications comply with EIA Standards*
- *Specifications and design are subject to change without notice for further improvement*

Printed in China / Imprimé en Chine / Impreso en China 2000/12 (D C) 284-9306-00

Clarion

Installation/Wire Connection Guide (XDZ716 / DXZ715 / HX-D10)
Manuel d'installation et de connexion (XDZ716 / DXZ715 / HX-D10)
Guía de instalación/conexión de cables (XDZ716 / DXZ715 / HX-D10)

English Français Español

1. BEFORE STARTING / PRÉPARATIFS / ANTES DE COMENZAR

1 This set is exclusively for use in cars with a negative ground, 12 V power supply
2. Read these instructions carefully
3 Be sure to disconnect the battery "⊖" terminal before starting This is to prevent short circuits during installation (Figure 1)

1 Cet appareil est exclusivement destiné à être utilisé dans les voitures avec une alimentation 12 V à masse négative
2 Lire ces instructions attentivement
3 S'assurer de débrancher la borne "⊖" de la batterie avant de commencer Cela évitera les court-circuits pendant l'installation (Figure 1)

1 Esta unidad ha sido diseñada para utilizarse exclusivamente en automóviles con fuente de alimentación de 12 V, y negativo a masa
2 Lea cuidadosamente estas instrucciones
3 Antes de comenzar, cerciórese de desconectar el terminal "⊖" de la batería Esto es para evitar cortocircuitos durante la instalación (Figura 1)

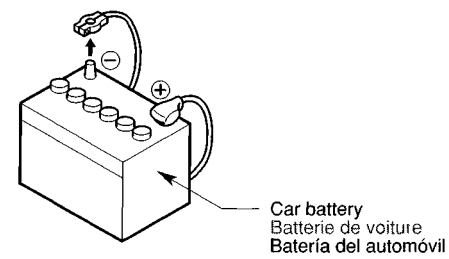

Figure 1 / Figure 1 / **Figura 1**

English Français Español

2. CAUTIONS ON INSTALLATION / PRÉCAUTIONS AU SUJET DE L'INSTALLATION / PRECAUCIONES PARA LA INSTALACIÓN

1 Prepare all articles necessary for installing the source unit before starting
2 Install the unit within 30° of the horizontal plane (Figure 2)
3 If you have to do any work on the car body, such as drilling holes, consult your car dealer beforehand
4 Use the enclosed screws for installation Using other screws can cause damage (Figure 3)

1 Avant de commencer, préparer toutes les pièces nécessaires pour installer l'appareil pilote
2 Installer l'appareil avec un angle inférieur à 30° par rapport à l'horizontal (Figure 2)
3 S'il est nécessaire d'effectuer certains travaux sur la carrosserie comme percer des trous, consulter d'abord votre concessionnaire automobile
4 Utiliser les vis fournies pour l'installation L'utilisation d'autres vis peut causer des dommages (Figure 3)

1 Antes de comenzar, prepare todos los elementos necesarios para instalar la unidad fuente
2 Instale la unidad con un ángulo de 30° sobre el plano horizontal (Figura 2)
3 Si tiene que realizar cualquier trabajo en la carrocería, como taladrado de orificios, etc , consulte al proveedor de su automóvil
4 Utilice los tornillos suministrados para la instalación La utilización de otros tornillos podría resultar en daños (Figura 3)

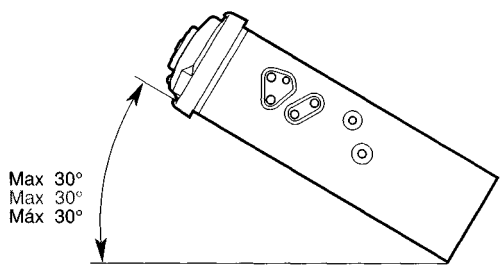

Figure 2 / Figure 2 / **Figura 2**

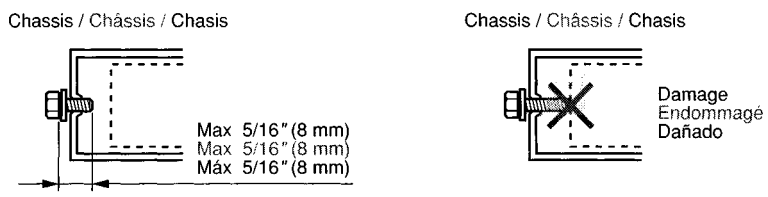

Figure 3 / Figure 3 / **Figura 3**

English Français Español

3. INSTALLING THE SOURCE UNIT / INSTALLATION DE L'APPAREIL PILOTE / INSTALACIÓN DE LA UNIDAD FUENTE

■ Universal Mount

1 Place the universal mounting bracket into the instrument panel, use a screwdriver to bend each stopper of the universal mounting bracket inward, then secure the stopper as shown in Figure 4
2 Wire as shown in Section 6
3 Insert the source unit into the universal mounting bracket until it locks
4 Take care of the top and bottom of the outer escutcheon and mount it so that all the hooks are locked (Figure 5)

Notes:
1) Some car models require special mounting kits for proper installation Consult your Clarion dealer for details
2) Fasten the front stopper securely to prevent the source unit from coming loose

■ Montage universel

1 Placer le support de montage universel dans le tableau de bord, utiliser un tournevis pour replier vers l'extérieur chaque languette du support de montage universel, puis fixer les languettes comme montré sur la Figure 4
2 Câbler comme montré dans la Section 6
3 Insérer l'appareil pilote dans le support de montage universel jusqu'à ce qu'il soit bloqué
4 Repérer le haut et le bas de l'écusson extérieur et le monter de manière que tous les crochets soient verrouillés (Figure 5)

Remarques:
1) Certains modèles de voiture nécessitent un kit de montage spécial pour une installation correcte Consulter le revendeur Clarion pour les détails
2) Serrer fermement la languette avant pour éviter que l'appareil pilote ne se desserre

■ Montaje universal

1 Coloque el soporte de montaje universal en el tablero de instrumentos, utilice un destornillador para doblar cada retén del soporte de montaje universal hacia adentro, y después asegure el retén como se muestra en la Figura 4
2 Conecte los cables como se muestra en la Sección 6
3 Inserte la unidad fuente en el soporte de montaje universal hasta que quede enganchado
4 Tenga cuidado con la partes superior e inferior de la pieza ornamental exterior, y móntela de forma que todos los ganchos queden bloqueados (Figura 5)

Notas:
1) Algunos modelos de automóviles requieren juegos de montaje especiales para realizar la instalación apropiada Solicite los detalles a su proveedor Clarion
2) Apriete con seguridad el retén frontal para evitar que se afloje la unidad fuente

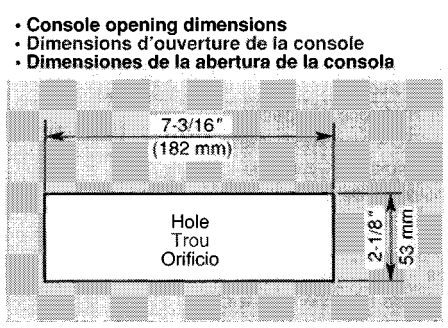

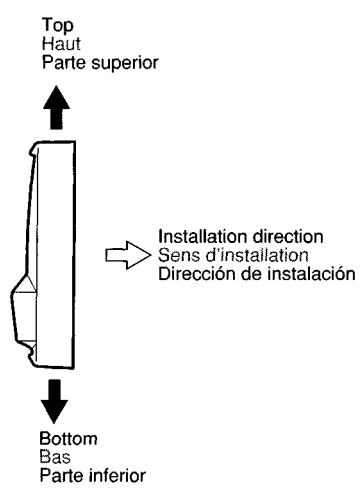

Outer escutcheon side view
Vue latérale de l'écusson extérieur
Vista lateral de la pieza ornamental exterior

Figure 5 / Figure 5 / **Figura 5**

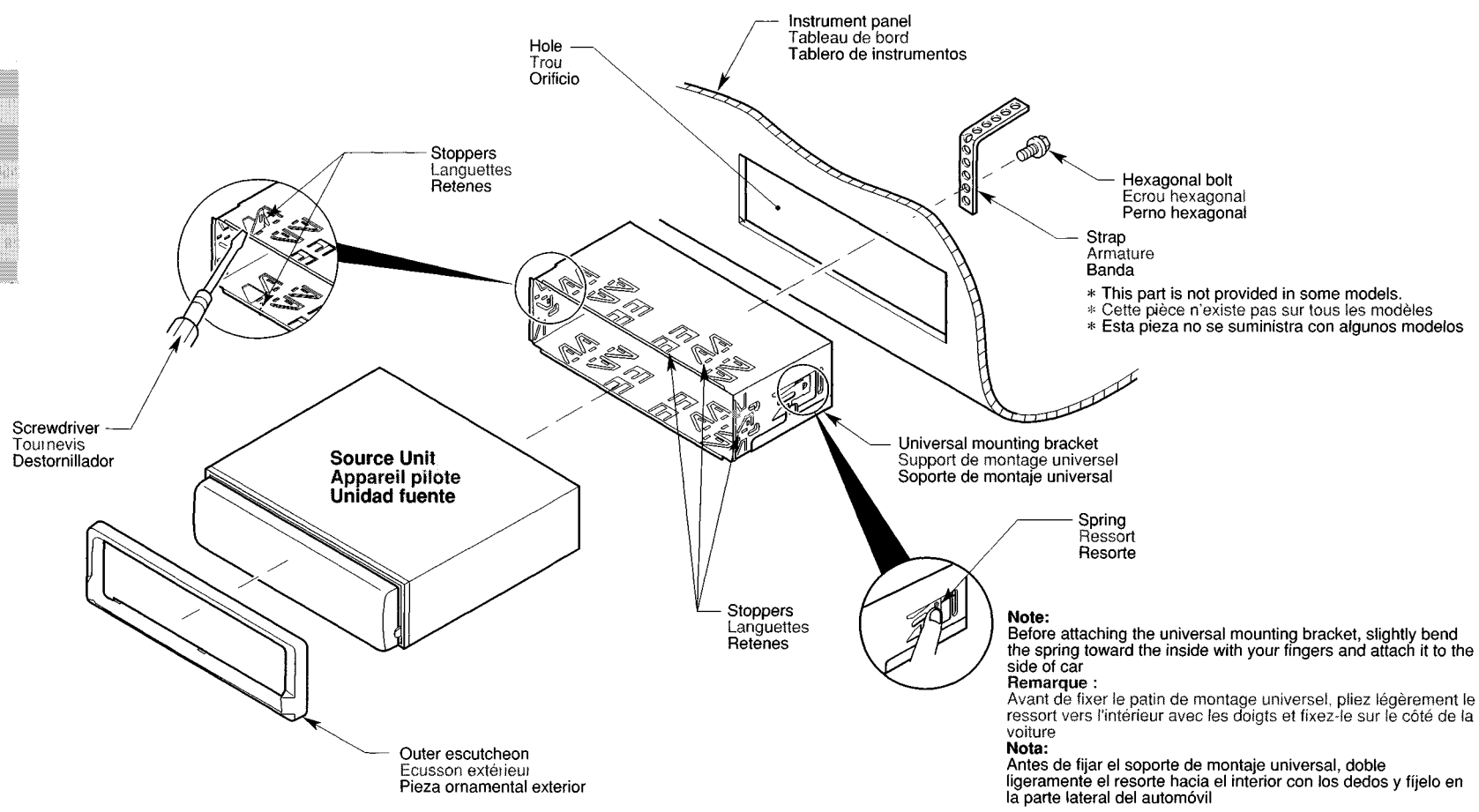

Note:
Before attaching the universal mounting bracket, slightly bend the spring toward the inside with your fingers and attach it to the side of car
Remarque :
Avant de fixer le patin de montage universel, pliez légèrement le ressort vers l'intérieur avec les doigts et fixez-le sur le côté de la voiture
Nota:
Antes de fijar el soporte de montaje universal, doble ligeramente el resorte hacia el interior con los dedos y fíjelo en la parte lateral del automóvil

Figure 4 / Figure 4 / **Figura 4**

■ Fixed Mount
(TOYOTA, NISSAN and other ISO/DIN equipped vehicles)

This unit is designed for fixed installation in the dashboard.
If the vehicle is equipped with a factory-installed radio, install the source unit with the parts and screws marked (*) (Figure 6)
If the vehicle is not equipped with a factory-installed radio, obtain an installation kit to install the source unit in the following procedure

1 Secure the mounting brackets to the chassis as shown in Figure 6 Holes are pre-tapped for TOYOTA and NISSAN vehicles; modification, such as drilling new holes, of the mounting brackets may be required for other models
2 Wire as shown in Section 6
3 Secure the unit in the dashboard, and then reassemble the dashboard and the center panel

■ Montage fixe
(TOYOTA, NISSAN et autres véhicules équipés ISO/DIN)

Cet appareil est conçu pour une installation fixe dans le tableau de bord Si le véhicule est équipé d'un auto-radio installé à l'usine, installer l'appareil pilote avec les piéces et les écrous marquées de (*) (Figure 6)
Si le véhicule n'est pas équipé d'un auto-radio installé à l'usine se procurer un kit d'installation pur installer l'appareil pilote avec la procédure suivante

1 Fixer le support de montage sur le châssis comme montré sur la Figure 6 Les trous sont pré-découpés pour les véhicules TOYOTA et NISSAN; des modification du support de montage, comme le perçage de nouveaux trous, peuvent être nécessaire pour les autres modèles
2 Câbler comme montré dans la Section 6
3 Fixer l'appareil dans le tableau de bord puis remonter le tableau de bord et le panneau central

■ Montaje fijo
(Automóviles TOYOTA, NISSAN, y otros provistos de normas ISO/DIN)

Esta unidad ha sido diseñada para instalarse de forma fija en el tablero de instrumentos Si el automóvil dispone de una radio instalada en fábrica, instale la unidad fuente con las piezas y los tornillos marcados con (*) (Figura 6)
Si el automóvil no dispone de una radio instalada en fábrica, adquiera un juego de instalación para instalar la unidad fuente de acuerdo con el procedimiento siguiente

1 Asegure los soportes de montaje al chasis como se muestra en la Figura 6 Los orificios ya han sido taladrados en los automóviles TOYOTA y NISSAN, pero para otros modelos puede resultar necesario realizar modificaciones, como taladrado de nuevos orificios en los soportes de montaje
2 Conecte los cables como se muestra en la Sección 6
3 Asegure la unidad al tablero de instrumentos, y después vuelva a montar el tablero de instrumentos y el panel central

*: The parts and screws with this mark are used to install radio or included in the installation kit
★: The screws with this mark are originally attached to the vehicle
*: Les pièces et les vis portant cette marque sont utilisées pour l'autoradio installé ou fournies dans le kit d'installation
★ Les vis portant cette marque sont fournies d'origine avec le véhicule
*: Las piezas y tornillos con esta marca se utilizan para instalar la radio o se suministran con el juego de instalación
★: Los tornillos con esta marca están originalmente fijados a los automóviles

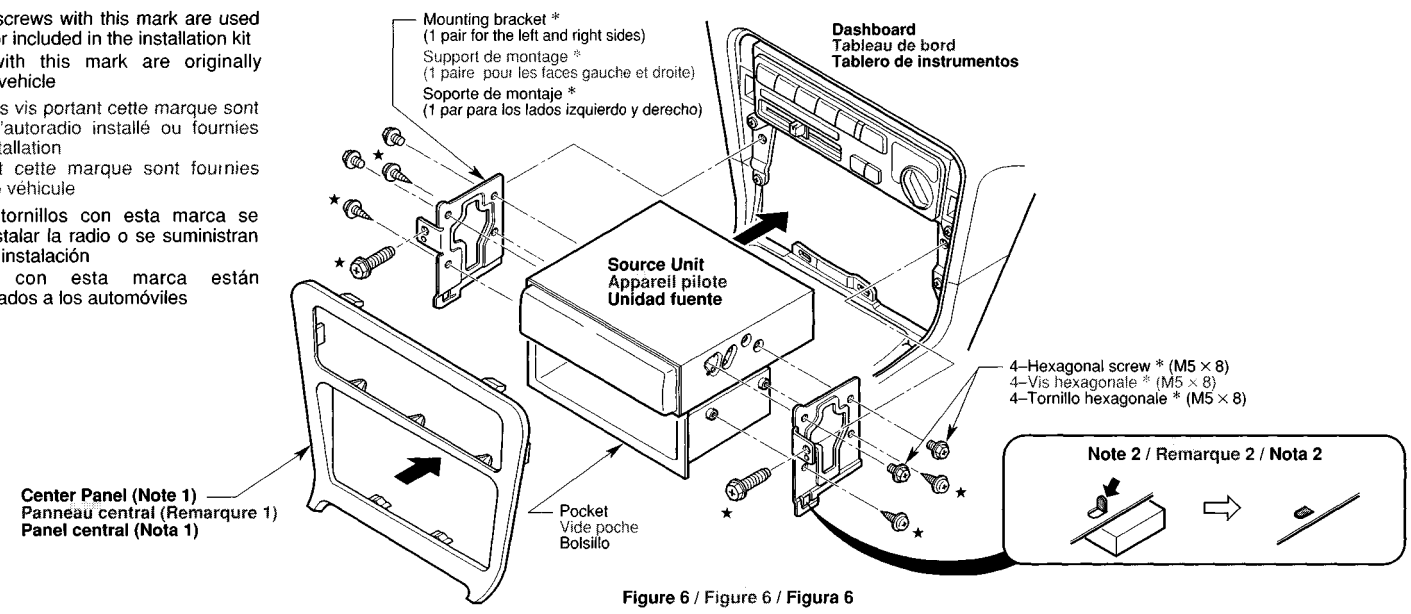

Figure 6 / Figure 6 / **Figura 6**

Note 1: *In some cases, the center panel may require some modification (trimming, filling, etc)*
Note 2: *If a hook on the installation bracket interferes with the unit, bend and flatten it with a nipper or a similar tool*

Remarque 1: *Dans certains cas, le panneau central peut nécessité certaines modifications (ébarbage, remplissage, etc)*
Remarque 2: *Si un crochet du support d'installation interfère avec l'appareil, le tordre et l'aplatir avec une pince ou un outil similaire*

Nota 1: *En algunos casos, el panel central puede requerir ciertas modificaciones (recorte, limado, etc)*
Nota 2: *Si algún gancho del soporte de montaje interfiere con la unidad, dóblelo y aplánelo con unos alicates u otra herramienta similar*

English Français Español

4. REMOVAL OF THE SOURCE UNIT / DEPOSE DE L'APPAREIL PILOTE / DESMONTAJE DE LA UNIDAD FUENTE

1 When removing the source unit, disassemble it in the reverse of the order in Section "3 INSTALLING THE SOURCE UNIT"
2 Press the outer escutcheon upward and remove it (Figure 7)
3 Insert and lock the hook plates (Figure 8)
4 Pull the hook plates to remove the source unit

1 Lors de la dépose de l'appareil pilote, démonter dans l'ordre inverse de la Section "3 INSTALLATION DE L'APPAREIL PILOTE"
2 Presser l'écusson extérieur vers le haut et le retirer (Figure 7)
3 Insérer et verrouiller les plaques à crochet (Figure 8)
4 Tirer sur les plaques à crochet pour retirer l'appareil pilote

1 Para desmontar la unidad fuente, realice el procedimiento inverso al de la Sección "3 INSTALACIÓN DE LA UNIDAD FUENTE"
2 Presione la pieza ornamental exterior hacia afuera y extráigala (Figura 7)
3 Inserte y bloquee las placas de enganche (Figura 8)
4 Tire de las placas de enganche para extraer la unidad fuente

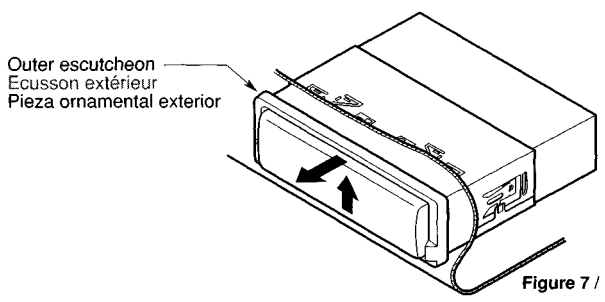

Figure 7 / Figure 7 / **Figura 7**

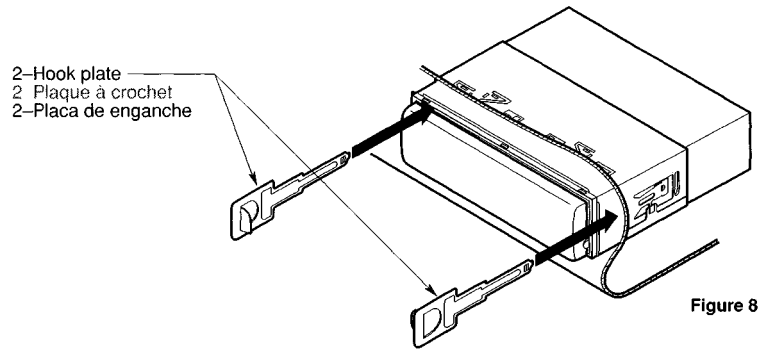

Figure 8 / Figure 8 / **Figura 8**

English Français Español

5. CAUTIONS ON WIRING / PRÉCAUTIONS AU SUJET DES CONNEXIONS / PRECAUCIONES PARA LA CONEXIÓN DE CABLES

1 Be sure to turn the power off when wiring
2 Be particularly careful where you route the wires
Keep them well away from the engine, exhaust pipe, etc Heat may damage the wires
3 If the fuse should blow, check that the wiring is correct
If it is, replace the fuse with a new one with the same amperage rating as the original one
4 To replace the fuse, open the lock on the source unit side, remove the old fuse and insert the new one (Figure 9)
* There are various types of fuse cases Do not let the battery side terminal touch other metal parts
5 Connect the CeNET extension cable fully and securely until it locks When the CeNET extension cable is pulled, hold the slide cap part and pull it towards you
* When the CeNET extension cable is extended or branches, use extension cable CCA-520 (8 feet [2 5m]) or CCA-521 (2 feet [0 6m]), or Y-adapter CCA-519 (each of them is sold seperately)
* Use the CeNET extension cable made by Clarion

1 S'assurer de mettre l'appareil hors circuit avant de faire le câblage
2 Faire particulièrement attention lors de l'acheminement des fils
Les éloigner du moteur, des tuyaux d'échappement, etc La chaleur risque d'endommager ces fils
3 Si le fusible saute, vérifier si le câblage est correct
Si le fusible est grillé, le remplacer par un fusible neuf de même ampérage que le fusible d'origine
4 Pour remplacer le fusible, ouvrir le loquet sur le côté de l'appareil pilote, retirer l'ancien fusible et insérer le fusible neuf (Figure 9)
* Il existe plusieurs types de boîtiers à fusibles Ne pas laisser la borne de batterie entrer en contact avec les autres pièces métalliques
5 Connecter le câble d'extension CeNET complètement et solidement jusqu'à ce qu'il soit verrouillé Pour tirer le câble d'extension CeNET, tenir la partie coulissante du capuchon et tirer vers vous
* Pour étendre ou dériver le câble d'extension CeNET, utiliser le câble d'extension CCA-520 (2,5 m [8 pieds]) ou CCA-521 (0,6m [2 pieds]), ou le l'adaptateur Y CCA-519 (ces câbles sont vendus séparément)
* Utiliser les câbles d'extension CeNET fabriqués par Clarion

1 Antes de hacer las conexiones, asegúrese de desconectar la alimentación de la unidad
2 Sea especialmente cuidadoso al dirigir y fijar los cables
manténgalos alejados del motor, tubo de escape, etc El calor puede dañar los cables
3 Si el fusible se quema, revise las conexiones
Si está quemado, reemplace el fusible por otro nuevo con el mismo valor de amperaje que el original
4 Para reemplazar el fusible, abra la tapa de la unidad fuente, retire el fusible antiguo e instale otro nuevo (Figura 9)
* Existen distintos tipos de cajas de fusibles no permita que el terminal del lado de la batería quede en contacto con otras partes metálicas
5 Conecte el cable prolongador CeNET completa y seguramente hasta que chasquee Para desconectar el cable, sujete la parte de la tapa deslizable y tire hacia usted
* Para prolongar o ramificar el cable prolongador CeNET, utilice un cable prolongador CCA-520 (2,5 m) o CCA-521 (0,6 m), o un adaptador en Y CCA-519 (vendidos aparte)
* Utilice un cable prolongador CeNET fabricado por Clarion

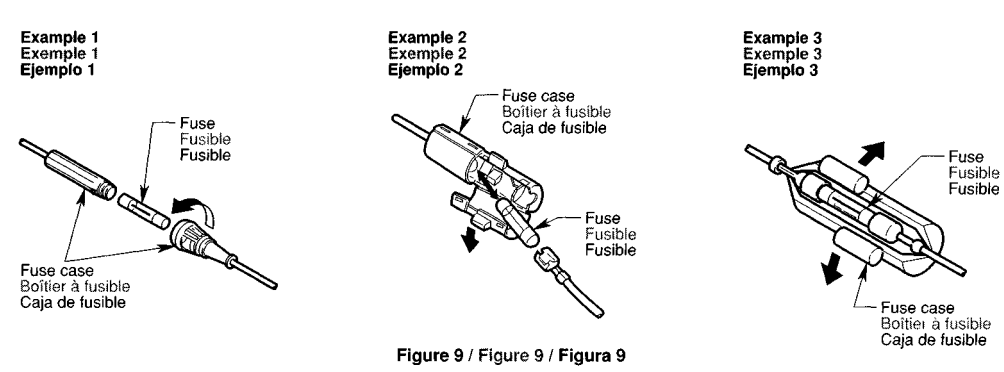

Figure 9 / Figure 9 / **Figura 9**

English Français Español

6. WIRE CONNECTIONS / CONNECTIQUE / CONEXIÓN DE CABLES

Note 1: *Some units do not have connecting leads or jacks (Refer to ★)*
Note 2: *The HX-D10 is transparent (Refer to ☆)*
Remarque 1: *Certains appareils n'ont pas de conducteurs de connexion ou de prises (Voir ★)*
Remarque 2: *Le HX-D10 est transparent (Voir ☆)*
Nota 1: *Algunas unidades no tienen cables de conexión ni conectores (Refiérase a ★)*
Nota 2: *El HX-D10 es transparente (Refiérase a ☆)*

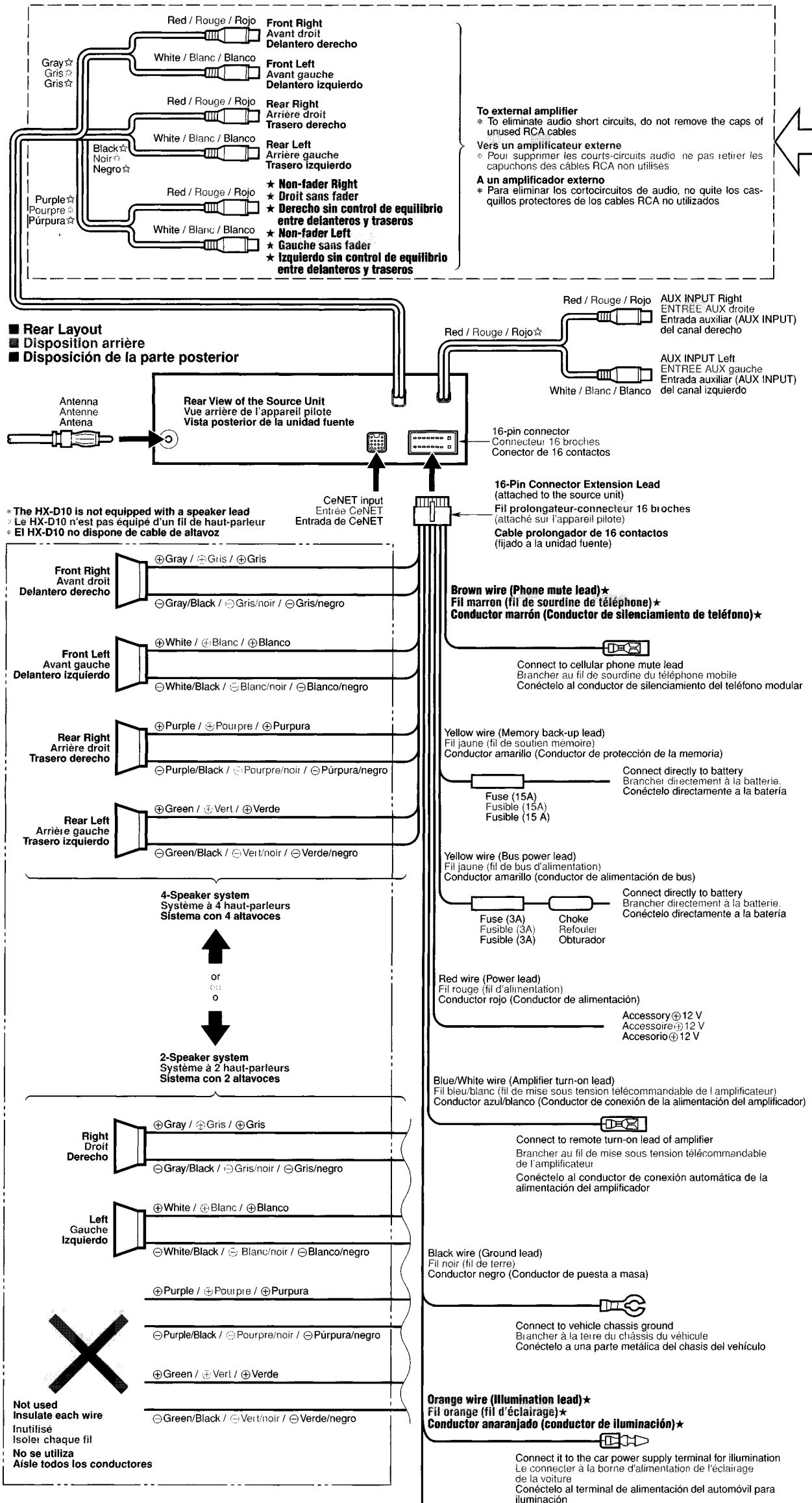

* The HX-D10 is not equipped with this switch
* Le HX-D10 n'est pas équipé de ce commutateur
* El HX-D10 no dispone de este interruptor

● **Be sure to read this when connecting using the RCA terminals**
● **Lire attentivement cette section lors du raccordement utilisant les bornes RCA**
● **Asegúrese de leer esta nota al conectar los terminales RCA**

RCA switch of source unit using internal amplifier may need to be changed when connecting with other units.
Use a plastic rod, etc., to switch the LINE IN/OUT selector switches of the source units. (Short-circuiting the source units boards will result in damage.)

Le commutateur RCA de l'appareil pilote utilisant un amplificateur interne nécessite un changement lors du raccordement à d'autres appareils.
Utiliser une tige en plastique, etc., pour commuter les sélecteurs d'entrée/sortie de ligne (LINE IN/OUT) des unités source (Le fait de court circuiter les cartes d'unités source endommage l'appareil.)

Al conectar a otras unidades, es posible que sea necesario cambiar la posición de ajuste del selector RCA de la unidad fuente que esté usando el amplificador interno
Utilice una varilla de plástico, etc., para ajustar los selectores de entrada/salida de línea (LINE IN/OUT) de las unidades fuente (El cortocircuitar las tarjetas de las unidades fuente puede causar daños.)

- **Turn off power before changing switch position**
- **Mettre l'appareil hors circuit avant de changer la position du commutateur.**
- **Desconecte la alimentación antes de cambiar la posición del selector**

Bottom view of source unit
Vue du dessous de l'appareil pilote
Vista de la base de la unidad fuente

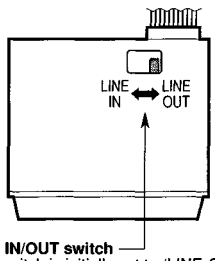

★ **Line IN/OUT switch**
The switch is initially set to 'LINE-OUT'
★ **Commutateur d'entrée/sortie de ligne (LINE IN/OUT)**
Ce commutateur est initialement réglé sur 'LINE OUT' (sortie de ligne)
★ **Selector de entrada/salida (IN/OUT) de línea**
El selector está inicialmente ajustado a la posición "LINE OUT"

RCA connection using LINE-OUT
Connexion RCA utilisant la sortie de ligne (LINE-OUT)
Conexión RCA utilizando LINE-OUT

● **When using external amplifier**
● **Lors de l'utilisation d'un amplificateur externe**
● **Cuando utilice un amplificador externo**

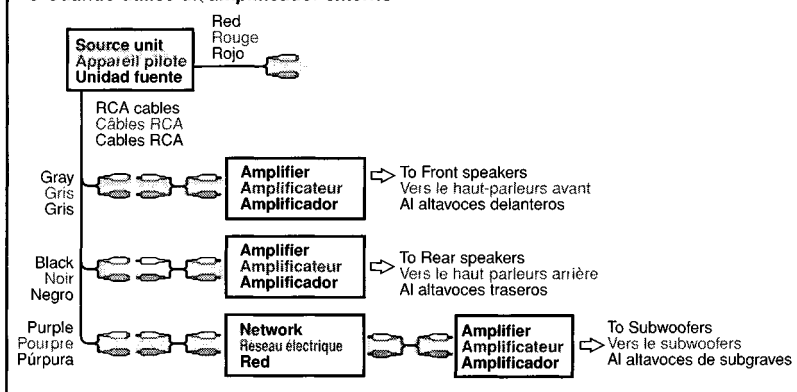

● **When using expanded DSP/EQ module with external amplifier**
● **Lors de l'utilisation d'un module DSP/EQ avec un amplificateur externe**
● **Cuando utilice un módulo DSP/EQ expandido con el amplificador interno**

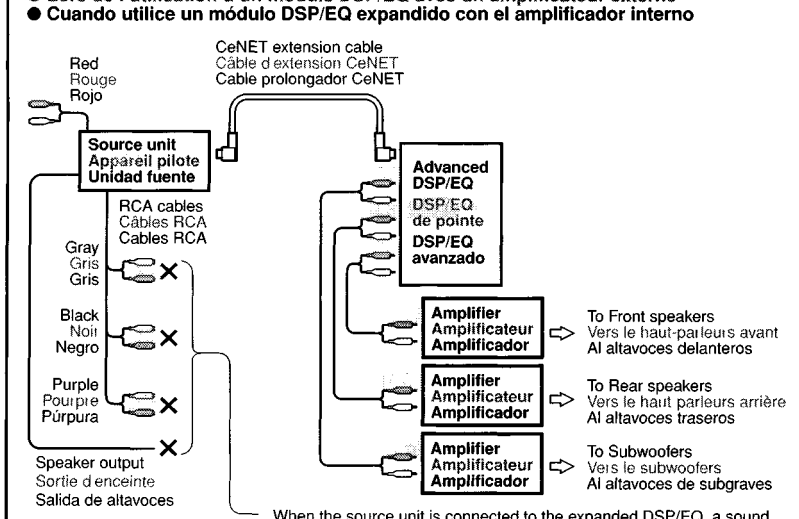

When the source unit is connected to the expanded DSP/EQ, a sound signal is not generated from both RCA pin cables of the source unit and speaker output
Quand l'appareil source est connecté au module DSP/EQ aucun signal sonore n'est généré des deux câbles RCA de l'appareil source et de la sortie des enceintes
Cuando la unidad fuente esté conectado a DSP/EQ, no habrá salida de señal de sonido a través de los cables clavijas RCA de la unidad fuente ni de la salida de altavoces

RCA connection using LINE-IN
Connexion RCA utilisant la borne d'entrée de ligne (LINE-IN)
Conexión RCA utilizando LINE-IN

● **Using internal amplifier connected to expanded DSP/EQ module**
● **Utilisation de l'amplificateur interne connecté au module DSP/EQ**
● **Utilización del amplificador interno conectado al módulo DSP/EQ expandido**

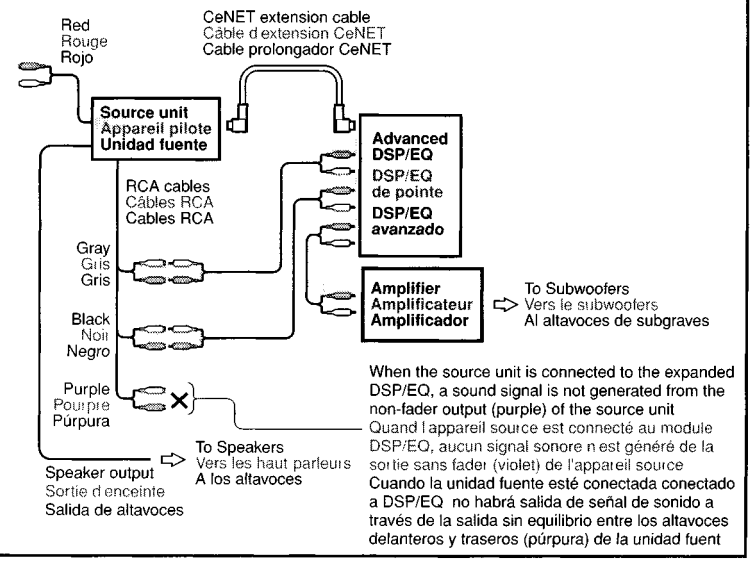

When the source unit is connected to the expanded DSP/EQ, a sound signal is not generated from the non-fader output (purple) of the source unit
Quand l'appareil source est connecté au module DSP/EQ, aucun signal sonore n'est généré de la sortie sans fader (violet) de l'appareil source
Cuando la unidad fuente esté conectada conectado a DSP/EQ no habrá salida de señal de sonido a través de la salida sin equilibrio entre los altavoces delanteros y traseros (púrpura) de la unidad fuent

English Français Español

7. SAMPLE SYSTEMS / EXEMPLES DE SYSTÉMES / EJEMPLOS DE SISTEMAS

■ **Example of the system using an internal amplifier (AUDIO)**
(The HX-D10 is not equipped with an internal amplifier)
■ Exemple de système utilisant un amplificateur interne (AUDIO)
(Le HX-D10 n'est pas équipé d'un amplificateur externe)
■ **Ejemplo de sistema utilizando un amplificador interno (AUDIO)**
(El HX-D10 no dispone de amplificador interno)

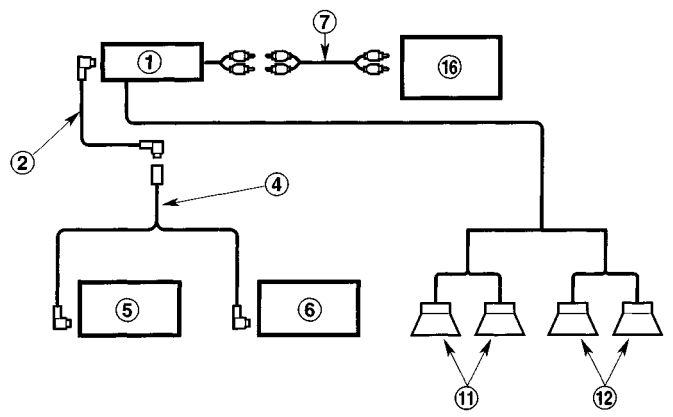

■ **Example of the system using an external amplifier (AUDIO, VISUAL)**
■ Exemple de système utilisant un amplificateur extérieur (AUDIO, VISUEL)
■ **Ejemplo de sistema utilizando un amplificador externo (AUDIO, VÍDEO)**

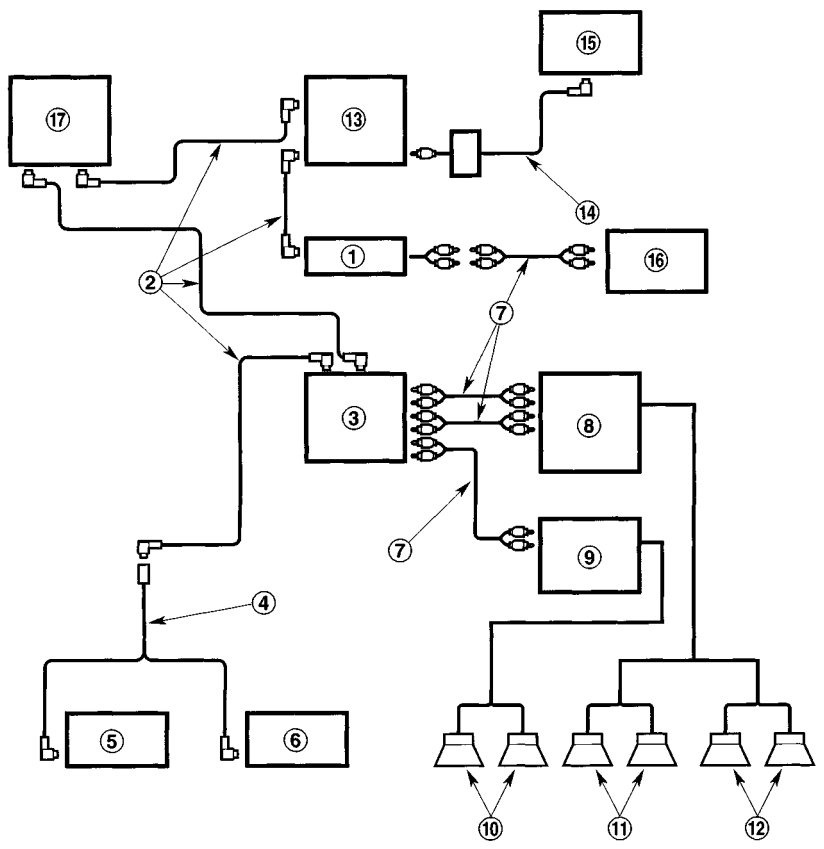

■ **Example of the system using an external amplifier. (AUDIO)**
■ Exemple de système utilisant un amplificateur extérieur (AUDIO)
■ **Ejemplo de sistema utilizando un amplificador externo (AUDIO)**

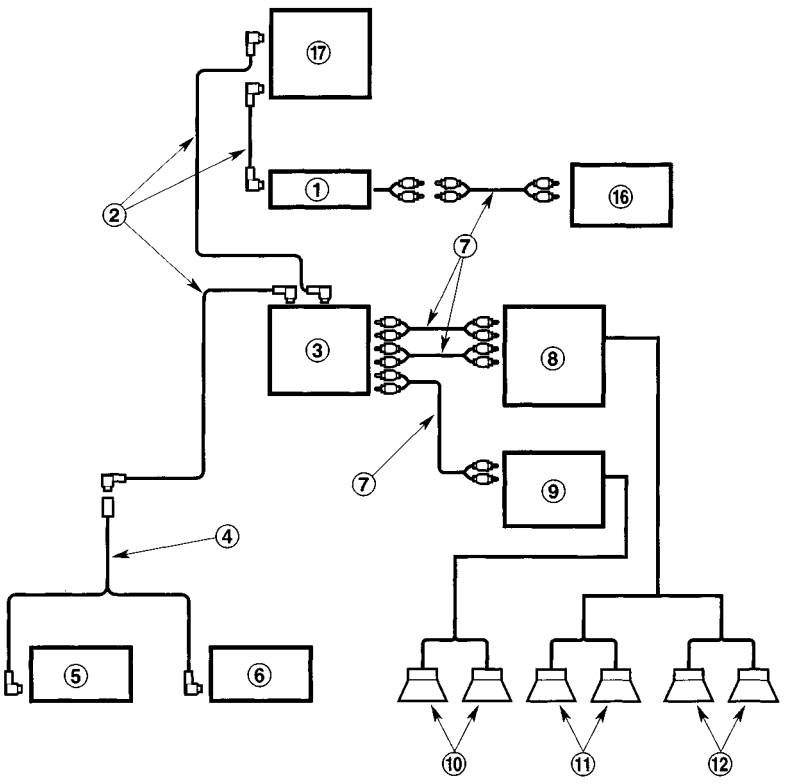

Note:
Use a CeNET extension cable that is less than 20 m in length (including the Y-adapter CCA-519)
Remarque:
Utiliser un câble d'extension CeNET inférieur à 20 m de long (en comptant aussi le l'adaptateur Y CCA-519)
Nota:
Utilice un cable CeNET de menos de 20 m de longitud (incluyendo el adaptador en Y CCA-519)

❊ Some source units cannot control the expanded DSP/EQ module or expanded TV tuner module Read the owner's manual about whether the unit can control them
❊ Certains appareils source ne peuvent pas commander le module DSP/EQ ou le module tuner de télévision Consulter le mode d'emploi pour savoir si l'appareil peut le commander
❊ Algunas unidades fuente no podrán controlar el módulo DSP/EQ ni el módulo sintonizador de televisión Con respecto a si la unidad puede controlarlo o no, lea el manual de instrucciones

English

①	Source Unit
②	CeNET extension cable
③	Advanced DSP/EQ Module
④	Y-adapter (sold separately)
⑤	6-DISC MD changer
⑥	6 or 12-DISC CD Changer
⑦	RCA Extension Cable (sold separately)
⑧	4-Channel Power Amplifier
⑨	2-Channel Power Amplifier
⑩	Subwoofers
⑪	Front Speakers
⑫	Rear Speakers
⑬	Expanded TV Tuner Module
⑭	Monitor/Tuner Connection Cable
⑮	Video Monitor
⑯	External Unit
⑰	Expanded DAB tuner module

Français

①	Appareil pilote
②	Câble d'extension CeNET
③	Module DSP/EQ de pointe
④	L'adaptateur Y (vendu séparément)
⑤	Changeur de MD à 6 disques
⑥	Changeur de CD 6 ou 12 DISQUES
⑦	Câble prolongateur RCA (vendu séparément)
⑧	Amplificateur de puissance 4 canaux
⑨	Amplificateur de puissance 2 canaux
⑩	Subwoofers
⑪	Haut-parleurs avant
⑫	Haut-parleurs arrière
⑬	Module tuner TV
⑭	Câble de connexion moniteur/tuner
⑮	Moniteur vidéo
⑯	Appareil externe
⑰	Module de tuner DAB étendu

Español

①	Unidad fuente
②	Cable prolongador CeNET
③	Módulo DSP/EQ avanzado
④	Adaptador en Y (vendido aparte)
⑤	Cambiador de 6 minidiscos
⑥	Cambiador de 6 o 12 discos compactos
⑦	Cable prolongador RCA (vendidos aparte)
⑧	Amplificador de potencia de 4 canales
⑨	Amplificador de potencia de 2 canales
⑩	Altavoces de subgraves
⑪	Altavoces delanteros
⑫	Altavoces traseros
⑬	Módulo sintonizador de televisión expandido
⑭	Cable de conexión de monitor/sintonizador
⑮	Monitor de vídeo
⑯	Unidad externa
⑰	Módulo sintonizador DAB ampliado

English Français Español

8. GENERAL CAUTIONS / PRÉCAUTIONS GÉNÉRALES / PRECAUCIONES GENERALES

1 Do not open the case There are no user serviceable parts inside If you drop anything into the unit during installation, consult your dealer or an authorized CLARION service center
2 Use a soft, dry cloth to clean the case Never use hard cloth, thinner, benzen, alcohol, etc For tough dirt, apply a little cold or warm water to a soft cloth and wipe off the dirt gentry

IMPORTANT:
Improper installation may cause damage to your unit or car If you do not have the appropriate experience, consult a qualified installer Cutting chassis wire leads voids the warranty

1 Ne pas ouvrir le coffret Il n'y a pas de pièces réparables par l'utilisateur à l'intérieur de l'appareil Si un objet est tombé dans l'appareil pendant l'installation, consulter votre revendeur ou un service après-vente agréé CLARION
2 Utiliser un chiffon doux et sec pour nettoyer le coffret, ne jamais utiliser un chiffon rigide, un diluant, du benzène, de l'alcool, etc Pour enlever la saleté tenace, appliquer un peu d'eau froide ou tiède sur un chiffon doux et essuyer doucement la saleté

IMPORTANT:
Une installation incorrecte peut endommager l'appareil ou le véhicule Si l'on ne possède pas les connaissances requises, consulter un installateur qualifié Couper le fil du châssis annule la garantie

1 No abra la caja En el interior no hay piezas que pueda reparar el usuario Si dentro de la unidad entra algo durante la instalación, consulte a su proveedor o a un centro de servicio autorizado por CLARION
2 Para limpiar la caja, utilice un paño suave y seco no use nunca un paño duro, diluidor de pintura, benceno, alcohol, etc Para la suciedad resistente, aplique un poco de agua fría o caliente a un paño suave y frote suavemente la parte sucia

IMPORTANTE:
La instalación inapropiada puede causar daños en su unidad o su automóvil Si usted no posee la experiencia apropiada, consulte a un instalador cualificado El corte de los conductores de puesta a masa (carrocería) anulará la garantía

Clarion Co., Ltd.

11 Which of the following products/services do you own or intend to buy within the next 18 months?

	Own	Intend to buy		Own	Intend to buy
Home Desktop PC	1 ☐	9 ☐	Satellite System/Service	17 ☐	24 ☐
Laptop Computer	2 ☐	10 ☐	Cellular Telephone	18 ☐	25 ☐
Color Monitor	3 ☐	11 ☐	Pager	19 ☐	26 ☐
CD-ROM	4 ☐	12 ☐	Call Waiting	20 ☐	27 ☐
Computer Speakers	5 ☐	13 ☐	Karaoke	21 ☐	28 ☐
Color Printer	6 ☐	14 ☐	Vehicle Navigation System	22 ☐	29 ☐
Modem	7 ☐	15 ☐	Vehicle Security System	23 ☐	30 ☐
Large Screen TV (35" or larger)	8 ☐	16 ☐			

12 Is this your first Clarion purchase? 1 ☐ 1st purchase 2 ☐ 2nd purchase 3 ☐ 3rd or more

13 What type of computer do you own?

1 ☐ IBM PC or Clone 2 ☐ Macintosh or Clone 3 ☐ Do Not Own

14 Which on-line service/network do you subscribe to?

1 ☐ America Online 4 ☐ MSN 7 ☐ Other
2 ☐ CompuServe 5 ☐ Internet 8 ☐ Do not have service/access
3 ☐ GEnie 6 ☐ Prodigy

ADX SERIES, PRO VIDEO & PRO AUDIO WARRANTY INFORMATION

Clarion offers two-year warranty coverage on ADX Series, Pro Video, and Pro Audio products (excluding speakers) **ONLY** if the product is installed at the same location where purchased. If not installed by the authorized dealer, one-year warranty coverage is provided.

To obtain two-year warranty coverage on your Clarion ADX Series, Pro Video, or Pro Audio product, excluding speakers, complete this section in full and return it along with a copy of your receipt and the attached product registration information in an envelope addressed to:

Clarion Sales Corporation
P.O. Box 863
Brea, CA 92822-0863

Retailer/Dealer Name

Retailer/Dealer Address

City State/Prov. Zip/Post Code

Retailer/Dealer Phone w/Area Code Date Installed: Month Day Year

TWO-YEAR WARRANTY NOT VALID UNLESS THE SECTION ABOVE IS COMPLETED IN FULL AND RETURNED WITH A COPY OF YOUR RECEIPT.

Please tape closed along this edge DO NOT STAPLE

CLARION SALES CORPORATION
PO BOX 863
BREA CA 92822-0863

Clarion
CAR AUDIO & BEYOND

PLEASE PLACE
FIRST CLASS STAMP
HERE
(Post Office will not deliver without proper postage.)

Clarion®
CAR AUDIO & BEYOND

Product Registration

for USA and Canada only

IMPORTANT:

1 Detach this section of the card and keep it with your records.

2. Retain your sales receipt to validate warranty service.

3. If you purchased a Clarion ADX Series, Pro Video or Pro Audio product, be sure to complete the box on the last page of this form.

Information on Clarion authorized Warranty Centers may be obtained by writing Clarion Corporation at the address below or by calling

1-800-GO-CLARION.

In USA:
Clarion Sales Corporation
Warranty Service Center
661 West Redondo Beach Blvd.
Gardena, CA 90247
(310) 327-9100

In Canada
Clarion Canada, Inc.
Warranty Service Center
2239 Winston Park Drive
Oakville, Ontario L6H 5R1
(905)829-4600

www.clarionmultimedia.com

Clarion WARRANTY INFORMATION

TEAR THIS PAGE OFF AND KEEP IT WITH YOUR RECEIPT!

Model Number | Serial Number | $ Price Paid (before tax)

Retailer/Dealer Name

Retailer/Dealer Phone w/Area Code | Date Installed: Month | Day | Year

This product is warranted against all defects in material workmanship for a period of one year from the date of original purchase. The conditions of this warranty and the extent of the responsibility of Clarion Corporation under this warranty are as follows:

1. **PROOF OF DATE OF PURCHASE WILL BE REQUIRED FOR WARRANTY SERVICE OF THIS PRODUCT. INFORMATION ABOUT CLARION AUTHORIZED WARRANTY SERVICE CENTERS MAY ALSO BE OBTAINED BY CONTACTING OR WRITING CLARION CORPORATION AT THE ADDRESS LISTED ON THE FRONT OF THIS CARD.**
2. This warranty will become void if service performed by anyone other than an approved Clarion Warranty Service Center results in damage to product.
3. This warranty does not apply to any product which has been subject to misuse, neglect or accident, or which has had the serial number altered, defaced or removed, or which has been connected, installed, adjusted or repaired, other than in accordance with the instructions furnished by Clarion Corporation.
4. This warranty does not cover car static or other electrical interferences, tape head cleaning or adjustments, or labor costs for the removal or reinstallation of the unit for repair.
5. The sole responsibility of Clarion Corporation under this Warranty shall be limited to the repair or replacement thereof, at the sole discretion of Clarion Corporation.
6. If it becomes necessary to send the product or any defective part to Clarion Corporation or an authorized warranty service station, the product must be shipped in its original carton or equivalent carton, fully insured, with shipping charges prepaid. Clarion Corporation will not assume any responsibility for any loss or damage incurred in shipping.
7. ALL IMPLIED WARRANTIES EXCEPT TO THE EXTENT PROHIBITED BY APPLICABLE LAW SHALL HAVE NO GREATER DURATION THAN THE WARRANTY PERIOD SET FORTH ABOVE. UNDER NO CIRCUMSTANCES SHALL CLARION CORPORATION BE LIABLE FOR ANY LOSS OR DAMAGE, DIRECT OR CONSEQUENTIAL, ARISING OUT OF THE USE OR INABILITY TO USE THE PRODUCT. BECAUSE SOME STATES DO NOT ALLOW LIMITATIONS ON HOW LONG AN IMPLIED WARRANTY LASTS OR EXCLUSIONS OR LIMITATIONS OF INCIDENTAL OR CONSEQUENTIAL DAMAGES, THE ABOVE LIMITATIONS OR EXCLUSIONS MAY NOT APPLY TO YOU.
8. THIS WARRANTY GIVES YOU SPECIFIC LEGAL RIGHTS, AND YOU MAY ALSO HAVE OTHER RIGHTS WHICH VARY FROM STATE TO STATE.
9. Should you have any difficulties with the performance of this product during warranty, or with any Clarion authorized service centers, you may contact the Clarion National Service Managers at the address listed on the front of this card or call 1-800-GO-CLARION for a listing of Authorized Warranty Service Centers in your area.

281-0607-00

Tear at perforation and keep this page with your receipt

Complete this section and mail to Clarion

Clarion PRODUCT REGISTRATION CARD

Thank you for selecting a high-quality product from Clarion. We hope you are completely satisfied with your purchase. We'd like to help serve you better by finding out more about your reasons for choosing Clarion. Please take a few moments to fill out the registration information on this card and answer a few questions about yourself and your product. Then, return the card to Clarion within 10 days of purchase. Your answers will be kept strictly confidential. We appreciate your response!

In Canada, place the card in an envelope and mail to:
Clarion Canada, Inc., Warranty Service Center, 2239 Winston Park Drive, Oakville, Ontario L6H 5R1.

1 ☐ **Mr.** ☐ **Ms.** ☐ **Mrs.** ☐ **Miss**

First Name | M. I. | Last Name

Mailing Address | Apt. No.

City | State/Prov. | Zip/Post Code

Phone w/Area Code | Date of Purchase: Month | Day | Year

2 What Clarion product did you purchase?

Multimedia
1 ☐ Color LCD Display/Control Unit
2 ☐ Color LCD Display
3 ☐ Cellular Telephone
4 ☐ Voice-Activated Navigation System
5 ☐ Video Cassette Player
6 ☐ TV Tuner
7 ☐ Rear Vision Camera

Car Audio
8 ☐ AM/FM Cassette
9 ☐ AM/FM CD Player
10 ☐ AM/FM Cassette/CD Player
11 ☐ CD Changer
12 ☐ Equalizer/DSP Processor Module
13 ☐ Amplifier
14 ☐ Speakers

Model Number | Serial Number | $ Price Paid (before tax)

3 What is the name of the store where you purchased this product?

Retailer/Dealer Name

City | State/Prov.

4 What is your age? *(Optional)* 1 ☐☐ **Marital Status?** *(Optional)* 2 ☐ Married 3 ☐ Single

5 Are there any children in your household? 1 ☐ Yes 2 ☐ No

If yes, please specify age range: 3 ☐ 1 - 12 4 ☐ 13 -16 5 ☐ 17 & up

6 What is the highest level of education you have completed?

1 ☐ Some High School
2 ☐ High School Graduate
3 ☐ Some College
4 ☐ Completed College
5 ☐ Some Graduate School
6 ☐ Completed Graduate School
7 ☐ Vocation/Technical School

7 What best describes your primary occupation?

1 ☐ Professional/Technical
2 ☐ Upper Management/Executive
3 ☐ Middle Management
4 ☐ Sales/Marketing
5 ☐ Clerical/Service Worker
6 ☐ Tradesman/Machine Operator/Laborer
7 ☐ Self-Employed/Business Owner
8 ☐ Food Service
9 ☐ Homemaker
10 ☐ Student
11 ☐ Retired
12 ☐ Other

8 What is your annual household income? *(Optional)*

1 ☐ Under $10,000
2 ☐ $10,000 - $19,999
3 ☐ $20,000 - $29,999
4 ☐ $30,000 - $39,999
5 ☐ $40,000 - $49,999
6 ☐ $50,000 - $59,999
7 ☐ $60,000 - $69,999
8 ☐ $70,000 - $79,999
9 ☐ $80,000 - $89,999
10 ☐ $90,000 - $99,999
11 ☐ $100,000 and over

9 Which factors influenced you the MOST in choosing this Clarion Product?

Group A (Please check two)

1 ☐ Newspaper Advertisement
2 ☐ TV Commercial
3 ☐ Radio Commercial
4 ☐ Magazine Advertisement
5 ☐ Recommended by Friend/Family
6 ☐ Clarion Name/Reputation
7 ☐ Recommended by Store Salesperson
8 ☐ On-line Information
9 ☐ Clarion Web Site
10 ☐ Store Display
11 ☐ Special Promotion
12 ☐ Other

Group B (Please check two)

13 ☐ Warranty
14 ☐ Price
15 ☐ Quality/Reliability
16 ☐ Features
17 ☐ Appearance/Design
18 ☐ Ease of Operation
19 ☐ Other

10 What type of music do you listen to most often? (Please check one)

1 ☐ Rock
2 ☐ Jazz
3 ☐ Blues
4 ☐ Pop
5 ☐ Country
6 ☐ Classical
7 ☐ Rap
8 ☐ Rhythm & Blues
9 ☐ Reggae
10 ☐ New Age
11 ☐ Easy Listening
12 ☐ Alternative